Atlantic
DESIGN ENGINEERS, INC.

February 6, 2014

Board of Selectmen
c/o Mr. Charles J. Cristello, Town Manager
Town Hall Building
10 Nickerson Avenue
Middleborough, MA 02346

Re: ***Engineering Review***
Earth Removal Application - Riverrock
288 Thompson Street
ADE Project #2518.23

Dear Board Members:

Atlantic Design Engineers, Inc. (ADE) has completed our engineering review of the site plans and application materials for the above-referenced project relative to a Special Permit request under the Earth Removal bylaw. The Project Plan and engineer's response letter are revised dated 1/27/14 and the site plans are revised dated 2/4/14. All are prepared by GAF Engineering, Inc. for Riverrock Realty Trust of Raynham, MA.

The above-referenced plans have addressed the comments from our initial review letter of 1/23/14. We offer the following for the consideration of the Board:

1.) The revised plans now show a very gradual (12.5:1) southeastern slope as opposed to the 2:1 slope on the previous plans. This will result in additional earth removal. The application, total volumes, volume per phase, truck trips, Project Plan, etc. should be revised to reflect the new earthwork created by this new grading.

2.) There appears to be additional land clearing shown to the south, adjacent to the existing pond and the Janet Ellis property. This appears to encroach into the 100-foot buffer to the pond, and does not provide the 100 setback to property lines required by the Board. The purpose of this clearing is unknown.

3.) The plan shows revised (proposed) lots fronting on Fuller Street. The grading and land clearing encroach onto one of these lots. In addition, the 100-foot property line setback and the fencing/safety issues brought up by the Planning Department in their 1/24/14 letter, have not been addressed.

4.) The revised plans also do not appear to address the Planning Departments concern regarding minimizing the earth to be removed. It appears that relocating the reservoir on the other side of the proposed bog could accomplish this and also provide required buffer to the proposed lots off of Fuller Street.

P.O. Box 1051
Sandwich, MA 02563
(508) 888-9282 · FAX 888-5859
email: ade@atlanticcompanies.com
www.atlanticcompanies.com

5.) The applicant has indicated that the depth of the reservoir will be reduced if rock is encountered. We suggest this be made part of any conditions of approval.

6.) Private, non-bedrock wells in the area should be identified for future reference in case issues arrive during de-watering, construction or operation.

7.) NHESP approval is still outstanding. We suggest that the conditions of approval require revised plans to be submitted to the Board for approval if any changes result from the NHESP review.

If you have any questions, please do not hesitate to call me at (508) 888-9282.

Sincerely,

ATLANTIC DESIGN ENGINEERS, INC.

Richard J. Tabaczynski, P.E.
Vice President

RJT/rp

Incorporated 1669

CRANBERRY CAPITAL
OF THE WORLD

Town of Middleborough
Massachusetts
Department of Public Works
48 Wareham Street
Middleborough, MA 02346
Phone 508-946-2481 Fax 508-946-2484

Christopher Peck
D. P. W. Director

DIVISIONS
Highway
Sanitation
Insect & Pest Control
Tree Warden
Wastewater
Water

February 3, 2014

Mr. Stephen J. McKinnon, Chairman
Board of Selectmen
Town Hall
10 Nickerson Ave
Middleborough, Ma 02346

Subject: River Rock Realty Trust- Earth Removal Permit- 2nd Review Letter

Dear Mr. McKinnon,

The Department of Public Works has received a letter dated January 28, 2014 from GAF Engineering, Inc., responding to our review comments outlined in a letter sent to the Board of Selectmen dated January 21, 2014.

After reviewing the response letter we are satisfied with the engineer's response and have no further comments at this time.

Very Truly Yours,

Christopher Peck
Director of Public Works

Cc: Town Manager

GAF
ENGINEERING, INC.
ENGINEERS
SURVEYORS

January 28, 2014

Town of Middleborough
Dept. of Public Works
48 Wareham Street
Middleborough, MA 02346

Attn. Mr. Christopher Peck, DPW Director
Re: Riverrock Realty Trust- Earth Removal Permit
G.A.F. Job No. 13-8188

Dear Mr. Peck,

We were presented your review letter at last night's public hearing on the above captioned matter. We offer the following responses:

1. The suggested signage will be added to the final plans.

2. A construction entrance will be added to the plans. It will consist of 100 feet of bituminous concrete surface twenty five feet wide with a 30 foot radius on each side at the Fuller Street intersection. This pad will be preceded by 100 feet of 3 inch crushed stone for the 25 foot driveway width.

3. Final slope stabilization will consist of a 4 inch seed bed that will be hydroseeded (seeding and mulching note 6F)

We agree that final slope stabilization is necessary to be achieved and the contractor is required to obtain this result.

I trust the foregoing is sufficient for your immediate needs. Feel free to call with any questions. We will forward revised and final plans to your office for your review.

Sincerely,

William F. Madden, PE

WFM/jld

cc: Board of Selectman
Joe Arruda
Southbrook Development Inc.
Bayside Agricultural Inc.
B & T Realty Trust

266 MAIN ST.
WAREHAM, MA
02571
TEL 508.295.6600
FAX 508.295.6634

gaf@gaf-eng.com

Jacqueline Shanley

From: Trevor Ellis <tellis@gaf-eng.com>
Sent: Wednesday, February 05, 2014 10:12 AM
To: Jacqueline Shanley
Cc: Rich Tabaczynski - Atlantic Design Group; JOE ARRUDA; wfmadden@gaf-eng.com
Subject: Revised PDFs for Riverrock realty project Fuller st Middleborough
Attachments: COVER SHEET 1 OF 3 2-5-14.pdf; Site Plan SHEET 2 OF 3 2-5-14.pdf; NOTES LEGEND DETAILS SHEET 3 OF 3 2-5-14.pdf

Attached are the revised PDFs for your review.
I believe all prior concerns have been addressed along with some minor grade changes to the southern slope.
If you have any questions please feel free to contact us.

Thanks &
Best Regards,

Trevor Ellis
G.A.F Engineering, Inc.
266 Main Street
Wareham, MA 02571

Office: 508.295.6600 | Fax: 508.295.6634
Email: tellis@gaf-eng.com

PRIVILEGE AND CONFIDENTIALITY NOTICE
The information in this electronic mail is intended exclusively for the above-named recipient(s) only. It may contain privileged and confidential matters. If you have received this electronic mail in error or if you are not the above-named recipient, please notify the sender immediately by replying to this electronic mail or by collect calls to 508.295.6600. Do not disclose the contents to anyone.

PROPOSED CRANBERRY BOG AND EARTH REMOVAL PERMIT PLAN

288 THOMPSON STREET, MIDDLEBOROUGH, MASSACHUSETTS

APPLICANT:
RIVERROCK REALTY TRUST
369 CHURCH STREET
RAYNHAM, MA 02767

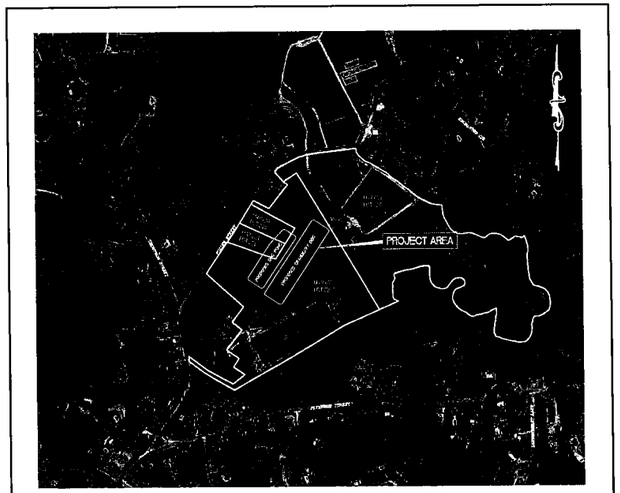

– AERIAL OVERVIEW –
SCALE: 1" = 400'

OWNERS:

MAP 033 LOT 2968 AND 2065
SOUTHBROOK DEVELOPMENT, INC.
3 CHESTER AVENUE
BERKLEY, MA 02779

MAP 033 LOT 1366
BAYSIDE AGRICULTURAL INC.
2417 CRANBERRY HIGHWAY
WAREHAM, MA 02571

MAP 033 LOT 2146
B & T REALTY TRUST
P.O. BOX 265
MIDDLEBOROUGH, MA 02346

SITE DATA

ZONING DISTRICT: RURAL RESIDENTIAL
WATER RESOURCE PROTECTION DISTRICT: Z4
NHESP DISTRICT (PH1332)
ACCESS ROAD: OFF FULLER STREET
ASSESSOR'S PARCEL NO.: 2968, 2146, 2065 & 1366
REQUIRED LOT AREA: 80,000 S.F.
REQUIRED LOT FRONTAGE: 200'
FRONT SETBACK: 50'
REAR SETBACK: 10'
SIDE SETBACK: 10'
FLOOD INSURANCE RATE MAP: COMMUNITY PANEL #25023C0336J (DATED: JULY 17, 2012)
ZONE X AREAS OF 0.2% ANNUAL CHANCE FLOOD.
ZONE A AREAS IN THE 100 YEAR FLOOD (BASE ELEVATION NOT DETERMINED)

PLAN INDEX

SHEET NO.	DESCRIPTION
1	TITLE SHEET
2	BOG DEVELOPMENT PLAN
3	NOTES, LEGEND & DETAILS

G.A.F. ENGINEERING, INC.
PROFESSIONAL ENGINEERS & LAND SURVEYORS
266 MAIN STREET, WAREHAM, MA 02571
TEL: (508) 295-6600 FAX: (508) 295-6634
E-MAIL: gaf.eng@verizon.net

DECEMBER 30, 2013

PERMIT SET
(NOT FOR CONSTRUCTION)

REV.	DATE	BY	APP'D	DESCRIPTION
2	2-4-14	TMC	WFM	GENERAL REVISIONS
1	1-27-14	TMC	WFM	PER REVIEW ENGINEERS COMMENTS

DATE: DEC. 30, 2013
DRAWN BY: TMC
CHECKED BY: WFM
JOB NO.: 13-8188
SCALE: NTS

APPROVED BY:
APPROVED BY:

G.A.F. ENGINEERING, INC.
PROFESSIONAL ENGINEERS & LAND SURVEYORS
266 MAIN STREET – WAREHAM, MA 02571
TEL: (508) 295-6600 FAX: (508) 295-6634
E-MAIL: gaf.eng@verizon.net or info@gaf-eng.com

COPYRIGHT © 2013 G.A.F. ENGINEERING, INC. ALL RIGHTS RESERVED. THIS DOCUMENT IS THE PROPERTY OF G.A.F. ENGINEERING, INC. AND IS PROTECTED BY FEDERAL COPYRIGHT LAW. IT MAY NOT BE REPRODUCED, STORED IN A RETRIEVAL SYSTEM OR TRANSMITTED IN WHOLE OR IN PART, IN ANY FORM OR BY ANY MEANS, ELECTRONIC, MECHANICAL, PHOTOCOPYING, RECORDING OR OTHERWISE, WITHOUT THE PRIOR WRITTEN CONSENT OF G.A.F. ENGINEERING, INC. OTHER THAN THE PARTY FOR WHOM THIS DOCUMENT WAS PREPARED FOR THE SPECIFIC PROJECT DESCRIBED HEREIN. ANY USE OF THIS DOCUMENT FOR ANY OTHER PURPOSE IS PROHIBITED. THIS DOCUMENT IS INSTRUMENT OF SERVICE AND SHALL REMAIN THE PROPERTY OF G.A.F. ENGINEERING, INC. WHETHER THE PROJECT FOR WHICH IT WAS PREPARED IS EXECUTED OR NOT. THE PARTY FOR WHOM THIS DOCUMENT WAS PREPARED FOR THE SPECIFIC PROJECT DESCRIBED HEREIN MAY USE THIS DOCUMENT FOR THE PURPOSE FOR WHICH IT WAS PREPARED PROVIDED THAT THE PARTY FOR WHOM THIS DOCUMENT WAS PREPARED FOR THE SPECIFIC PROJECT DESCRIBED HEREIN PAYS FULL COMPENSATION FOR ALL SERVICES RENDERED.

PROPOSED CRANBERRY BOG & EARTH REMOVAL PERMIT PLAN
TITLE SHEET
288 THOMPSON STREET MIDDLEBOROUGH, MA
PREPARED FOR:
RIVERROCK REALTY TRUST
369 CHURCH STREET RAYNHAM, MA 02767

JOB NO.: 13-8188
DWG. 1 OF 3

EROSION CONTROL NOTES:

1. THE SITE CONTRACTOR IS RESPONSIBLE FOR ESTABLISHING AND MAINTAINING SUITABLE EROSION AND SEDIMENTATION CONTROL DEVICES ON SITE DURING CONSTRUCTION AS REQUIRED TO PREVENT SILT FROM LEAVING THE SITE. SILT WILL NOT BE ALLOWED BEYOND CONSTRUCTION LIMITS. ADDITIONAL PROTECTION: ON-SITE PROTECTION MUST BE PROVIDED THAT WILL NOT PERMIT SILT TO LEAVE THE PROJECT CONFINES DUE TO UNFORSEEN CONDITIONS OR ACCIDENTS.
2. EROSION CONTROL MEASURES SHALL BE MAINTAINED AT ALL TIMES. IF FULL IMPLEMENTATION OF THE APPROVED PLANS DOES NOT PROVIDE SUFFICIENT EROSION AND SEDIMENT CONTROL, ADDITIONAL CONTROL MEASURES SHALL BE IMPLEMENTED. CONTRACTOR IS RESPONSIBLE FOR REPAIRING OR REPLACING EROSION CONTROL DEVICES WHICH BECOME INEFFECTIVE.
3. CONTRACTOR SHALL OBTAIN ALL NECESSARY PERMITS FOR ALL GRADING AND OTHER LAND DISTURBING ACTIVITIES PRIOR TO CONSTRUCTION.
4. THE CONTRACTOR IS RESPONSIBLE FOR THE CLEANUP AND REMOVAL OF ANY BUILDUP OF SEDIMENT WHICH ESCAPES FROM THE SITE.
5. CONTRACTOR IS RESPONSIBLE FOR CLEANING SILT AND DEBRIS OUT OF ALL STORM DRAINAGE STRUCTURES UPON THE COMPLETION OF CONSTRUCTION.
6. THE CONTRACTOR IS RESPONSIBLE FOR REMOVING ALL TEMPORARY EROSION CONTROL MEASURES AFTER CONSTRUCTION IS COMPLETE AND ALL DISTURBED AREAS HAVE BEEN STABILIZED.
7. THE CONTRACTOR IS RESPONSIBLE FOR ALL COSTS ASSOCIATED WITH ANY FINES LEVIED AGAINST THE SITE FOR VIOLATIONS OF EROSION CONTROL REGULATIONS.
8. CONTRACTOR SHALL PROVIDE TEMPORARY GROUND COVER FOR ALL AREAS WITH EXPOSED SOIL WHICH WILL NOT BE DISTURBED BY GRADING OPERATIONS FOR A PERIOD OF THIRTY DAYS OR MORE.
9. IF WORK ON THIS PROJECT IS SUSPENDED FOR ANY REASON, THE CONTRACTOR SHALL MAINTAIN THE SOIL EROSION AND SEDIMENTATION CONTROL FACILITIES IN GOOD CONDITION DURING THE SUSPENSION OF WORK.
10. SPRINKLE OR APPLY DUST SUPPRESSORS TO KEEP DUST WITHIN TOLERABLE LIMITS AT THE CONSTRUCTION SITE.

GENERAL NOTES:

1. ALL UNDERGROUND UTILITIES SHOWN OR NOT SHOWN WERE COMPILED ACCORDING TO AVAILABLE RECORD PLANS AND IN PART FROM FIELD SURVEY AND ARE APPROXIMATE ONLY. ACTUAL LOCATIONS MUST BE DETERMINED IN THE FIELD, BEFORE EXCAVATING, BLASTING, INSTALLING, BACKFILLING, GRADING, PAVEMENT RESTORATION, OR REPAIRING, ALL UTILITY COMPANIES, PUBLIC AND PRIVATE, MUST BE CONTACTED INCLUDING THOSE IN CONTROL OF UTILITIES NOT SHOWN ON THIS PLAN. SEE MGL CHAPTER 370, ACTS OF 1963. CONTRACTORS MUST CALL DIG-SAFE. G.A.F. ENGINEERING, INC. ASSUMES NO RESPONSIBILITY FOR DAMAGES INCURRED AS A RESULT OF UTILITIES OMITTED OR INACCURATELY SHOWN.
2. IN GENERAL, THE PLANS ARE DIAGRAMMATIC AND ARE NOT INTENDED TO SHOW EVERY FITTING, CHANGE IN DIRECTION OR DETAIL OF CONSTRUCTION.

SEEDING & MULCHING:

1. PERMANENT SEEDED VEGETATED COVER SHALL BE ESTABLISHED ON ALL DISTURBED SOIL SURFACES WITHIN 48 HOURS AFTER FINAL CONSTRUCTION AND CLEANUP.
2. SEED BED SHALL BE 4" OF SOIL WORKED INTO SUBBASE.
3. SIDE SLOPES SHALL NOT EXCEED 2:1, EXCEPT FOR INTERIOR DIKES AND WHERE NOTED OTHERWISE.
4. MAXIMUM SIDE SLOPES IN ALL CUTS & FILLS FACING DOWN SLOPE OFFSITE SHALL BE FINISHED GRADED TO SLOPES OF NOT MORE THAN 2:1.
5. WHERE SIDE SLOPES EXCEED 2:1, PROVIDE AN EROSION CONTROL BLANKET OVER THE PLANTED SEED BED.
6. PERMANENT SEEDING (BEFORE SEPTEMBER 15)
   A. LIME TO P.H. OF 6.5 ACCORDING TO SOIL TEST OR APPLY RATE OF 100lbs PER 1000 S.F.
   B. APPLY 10-10-10 FERTILIZER AT 18lbs PER 1000 S.F..
   C. INCORPORATE LIME & FERTILIZER IN TOP 4" OF SOIL BY HARROW OR RAKE.
   D. SEED 100lbs PER ACRE OF THE FOLLOWING SEED MIX:
      a. HALES SEED Co. CONSERVATION MIX. OR
      b. DEP EROSION CONTROL BMP SEED MIX No. 1.
   E. MULCH DISTURBED SOIL AREAS WITH HAY OR STRAW, 1-2 TONS/ACRE ANCHORED BY A SYNTHETHIC MULCH BINDER OR JUTE NETTING TACK TO SOIL OR A STRAW OR WOOD FIBRE MATRIX SANDWICH BETWEEN 2 LAYERS OF PLASTIC MESH ANCHORED TO GROUND MAY BE USED.
   F. HYDROSEEDING IS AN ALTERNATIVE FOR THIS APPLICATION.
7. TEMPORARY SEEDING (AFTER SEPTEMBER 15 BEFORE OCTOBER 15)
   A. STEPS 6A-6C.
   B. SEED 120lbs PER ACRE-100% PURE WINTER RYE.
   C. STEP 6E.
   D. AFTER OCTOBER 15, APPLY EXTRA HEAVY MULCH 150-200lbs PER 1000 S.F. OVER TEMPORARY SEED PER MULCH SPEC. RESEED & REMULCH IN THE SPRING.
8. TEMPORARY MULCH (OCTOBER 1-MAY 1)
   A. HAY OR STRAW, 150-200lbs PER 1000 S.F., 4" DEEP ANCHOR WITH SYNTHETIC MULCH BINDER, JUTE NETTING OR TACK TO TOP SOIL.
   B. BARK & COMPOST OR WOOD CHIPS: 500-600lbs PER 1000 S.F. 6" TO 12" DEEP, APPLIED WITH 10lbs NITROGEN FERTILIZER PER TON OF MULCH USED.

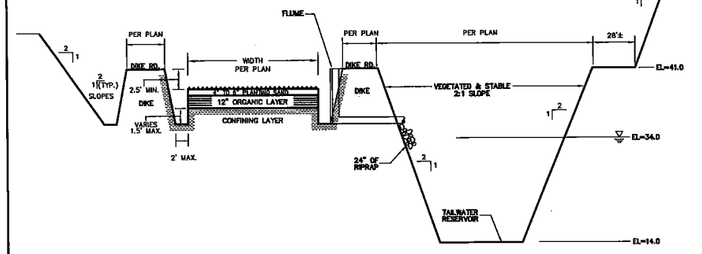

TYPICAL BED DESIGN
CRANBERRY BED SECTION
NTS

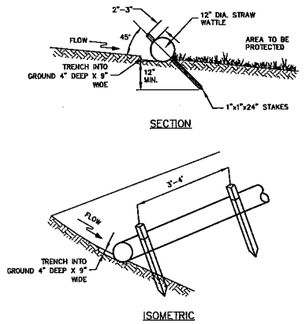

SECTION

ISOMETRIC

CONSTRUCTION SPECIFICATIONS

1. PRIOR TO INSTALLATION, CLEAR ALL OBSTRUCTIONS INCLUDING ROCKS, CLODS, AND DEBRIS GREATER THAN ONE INCH THAT MAY INTERFERE WITH PROPER FUNCTION OF STRAW WATTLE.
2. INSTALL STRAW WATTLES PERPENDICULAR TO THE FLOW DIRECTION AND PARALLEL TO THE SLOPE WITH THE BEGINNING AND END OF THE INSTALLATION POINTING SLIGHTLY UP THE SLOPE CREATING A "J" SHAPE AT EACH END TO PREVENT BYPASS. EXCAVATE A 4" DEEP X 9" WIDE TRENCH, EXCAVATED SOIL SHOULD BE PLACED UP-SLOPE FROM THE ANCHOR TRENCH.
3. PLACE THE WATTLE IN THE TRENCH SO THAT IT CONTOURS TO THE SOIL SURFACE. COMPACT SOIL FROM THE EXCAVATED TRENCH AGAINST THE WATTLE ON THE UPHILL SIDE. ADJACENT WATTLES SHOULD TIGHTLY ABUT OR OVERLAP.
4. SECURE WATTLES WITH 1"x1"x24" STAKES EVERY 3'-4' AND WITH A STAKE ON EACH END. STAKES SHOULD BE DRIVEN THROUGH THE MIDDLE OF THE WATTLE LEAVING AT LEAST 2"-3" OF STAKE EXTENDING ABOVE THE WATTLE. STAKES SHOULD BE DRIVEN PERPENDICULAR TO SLOPE FACE.
5. STRAW WATTLE TO BE 12" DIA. MANUFACTURED BY NORTH AMERICAN GREEN OR APPROVED EQUAL.

STRAW WATTLE DETAIL
N.T.S.

REV.	DATE	BY	APP'D	GENERAL REVISIONS / DESCRIPTION
2	2-4-14	TME	WFM	PER REVIEW ENGINEERS COMMENTS
1	1-27-14	TME	WFM	

DATE: DEC. 30, 2013
DRAWN BY: TME
CHECKED BY: WFM
JOB NO.: 13-8188
SCALE: NTS

APPROVED BY:

APPROVED BY:

SEE LAYOUT PLAN FOR ELEVATIONS

GRAVEL BASE SHALL CONFORM TO MHD M1.03.0 TYPE B

SUBGRADE & BASE SHALL BE COMPACTED TO MINIMUM 95% MAXIMUM DRY DENSITY.

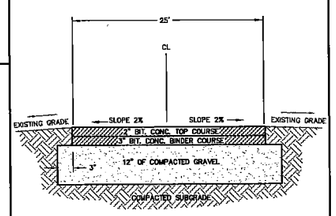

TYPICAL HEAVY DUTY PAVEMENT
N.T.S.

LEGEND

EXISTING	DESC.	PROPOSED
80	CONTOURS	80
80.0	SPOT GRADE	80x50
	EDGE OF BORDERING VEGETATED WETLAND (BVW) W/FLAGS	
	100 FOOT BUFFER ZONE TO A WETLAND	
	DIKE ROAD	
	TREE LINE	
	TRUCK ROUTE	

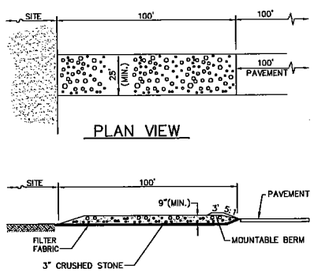

PLAN VIEW

CROSS-SECTION

NOTES:
1. ENTRANCE WIDTH SHALL BE A TWENTY-FIVE (25) FOOT MINIMUM, BUT NOT LESS THAN THE FULL WIDTH AT POINTS WHERE INGRESS OR EGRESS OCCURS.
2. THE ENTRANCE SHALL BE MAINTAINED IN A CONDITION WHICH SHALL PREVENT TRACKING OR FLOWING OF SEDIMENT ONTO PUBLIC RIGHTS-OF-WAY. THIS MAY REQUIRE PERIODIC TOP DRESSING WITH ADDITIONAL STONE AS CONDITIONS DEMAND AND REPAIR OR CLEANOUT OF ANY MEASURES USED TO TRAP SEDIMENT. ALL SEDIMENT SPILLED, DROPPED, WASHED OR TRACKED ONTO PUBLIC RIGHTS-OF-WAY MUST BE REMOVED IMMEDIATELY. BURIA SHALL BE PERMITTED. PERIODIC INSPECTION AND MAINTENANCE SHALL BE PROVIDED AS NEEDED.

STABILIZED CONSTRUCTION EXIT
N.T.S.

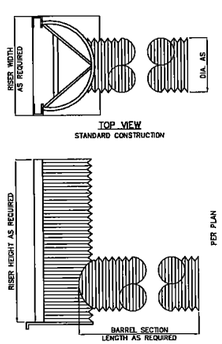

FLUME
N.T.S.

NOTES:
1. UNITS SHALL BE FELKER STANDARD ALUMINUM FOLW GATES OR APPROVED EQUAL.
2. ALL BARREL SECTIONS SHALL BE FITTED WITH ANTI-SEEP COLLARS, MADE AVAILABLE, WELDED OR BOLTED.

PERMIT SET
(NOT FOR CONSTRUCTION)

G.A.F. ENGINEERING, INC.
PROFESSIONAL ENGINEERS & LAND SURVEYORS
7 KIMBALL LANE, UNIT 4
LYNNFIELD, MA 01940
TEL: (508) 295-4600 FAX: (508) 295-6934
E-MAIL: gafeng@verizon.net

COPYRIGHT © 2013 G.A.F. ENGINEERING, INC. ALL RIGHTS RESERVED. THIS PLAN IS THE PROPERTY OF G.A.F. ENGINEERING, INC. AND IS NOT TO BE REPRODUCED, PUBLISHED OR USED IN ANY WAY WITHOUT THE EXPRESS WRITTEN CONSENT OF G.A.F. ENGINEERING, INC. ANY UNAUTHORIZED USE OF THIS PLAN SHALL BE AT THE SOLE RISK OF THE USER AND WITHOUT LIABILITY TO G.A.F. ENGINEERING, INC. AND ITS CONSULTANTS. ANY SUCH USE SHALL BE CONSIDERED AN INFRINGEMENT OF COPYRIGHT AND SUBJECT TO THE MAXIMUM PENALTIES ALLOWED BY LAW.

PROPOSED CRANBERRY BOG & EARTH REMOVAL PERMIT PLAN
DETAIL AND NOTES

PREPARED FOR:
RIVERROCK REALTY TRUST
369 CHURCH STREET
RAYNHAM, MA 02767

2188 THOMPSON STREET, SWANSEA, MASSACHUSETTS

JOB NO.: 13-8188
DWG. 3 OF 3

GENERAL NOTES:

1. EXISTING CONDITIONS SHOWN HEREON WAS COMPILED FROM A PLAN PREPARED BY OUTBACK ENGINEERING IN JUNE 2013, AERIAL MAPPING AND FIELD VERIFIED BY G.A.F. ENGINEERING IN OCTOBER 2013.

2. WETLANDS WERE DELINEATED AND LOCATED BY SETH DUFORT OF OUTBACK ENGINEERING IN MAY 2013.

3. EXISTING SURVEY IS ON NGVD DATUM PROVIDED BY OUTBACK ENGINEERING.

REV.	DATE	BY	APP'D	DESCRIPTION
2	2-4-14	TMC	WFM	GENERAL REVISIONS
1	1-27-14	TMC	WFM	PER REVIEW ENGINEER'S COMMENTS

DATE: DEC. 30, 2013
DRAWN BY: TMC
CHECKED BY: WFM
JOB NO.: 13-8185
SCALE: 1"=60'

APPROVED BY:

APPROVED BY:

G.A.F. ENGINEERING, INC.
PROFESSIONAL ENGINEERS & LAND SURVEYORS
258 MAIN STREET – WAREHAM, MA 02571
TEL: (508) 295-4600 FAX: (508) 295-4634
E-MAIL: GAF@GAFENGINEERING.COM

COPYRIGHT © G.A.F. ENGINEERING, INC. ALL RIGHTS RESERVED. THIS PLAN IS THE PROPERTY OF G.A.F. ENGINEERING, INC. AND IS NOT TO BE USED IN WHOLE OR IN PART FOR ANY PURPOSE OTHER THAN THAT FOR WHICH IT WAS PREPARED WITHOUT THE EXPRESS WRITTEN CONSENT OF G.A.F. ENGINEERING, INC. WITH A RECEIPT FOR ANY REPRODUCTIONS MADE. ANY UNAUTHORIZED USE OF THIS PLAN SHALL BE AT THE SOLE RISK OF THE USER AND WITHOUT LIABILITY TO G.A.F. ENGINEERING, INC. ANY SUCH UNAUTHORIZED USE SHALL BE CONSIDERED AN INFRINGEMENT UPON THE RIGHTS OF G.A.F. ENGINEERING, INC. AND SHALL MAKE USER LIABLE FOR ESTABLISHED DAMAGES.

PROPOSED CRANBERRY BOG & EARTH REMOVAL PERMIT PLAN
255 THOMPSON STREET – MIDDLEBOROUGH, MA
PREPARED FOR:
RIVERROCK REALTY TRUST
RAYNHAM, MA 02767
38 CHURCH STREET

JOB NO.: 13-8185
DWG. 2 OF 3

PERMIT SET
(NOT FOR CONSTRUCTION)

Jacqueline Shanley

From: William F. Madden <wfmadden@gaf-eng.com>
Sent: Wednesday, February 05, 2014 2:04 PM
To: Jacqueline Shanley
Cc: joebrsandstone@yahoo.com; 'Marcus Baptiste'; ccistello@middleborough.com; rtab@atlanticcompanies.com; Ruth Geoffroy
Subject: Planning Board Review
Attachments: 20140205134653371.pdf

Jackie,

Please find attached a copy of our responses to the Planning Board review. Do not hesitate to contact us should you have any questions. Thank you.

Sincerely,
William F. Madden, PE
G.A.F Engineering, Inc.
266 Main Street Wareham, MA 02571
Office: 508.295.6600 | Fax: 508.295.6634

ENGINEERING, INC.
ENGINEERS
SURVEYORS

256 MAIN ST
WAREHAM, MA
02571
TEL 508.295.6600
FAX 508.295.6634

gef@gef-eng.com

February 5, 2014

Town of Middleborough
Board of Selectman
10 Nickerson Ave.
Middleborough, MA 02346

RE: Riverrock Realty Trust
Earth Removal
Off Fuller Street
Middleborough, MA
G.A.F. Job No. 13-8188

Honorable Selectman,

Please find responses raised by the Middleborough Planning Director in the correspondence dated January 24, 2014. Our responses are in bold text under each comment raised. Also, please find plans revised through February 4, 2014.

Comment: *1. The Project Locus includes 2 street front Form A lots and at least 1 future retreat lot owned by others, Assesors Map 33, Lots 2146, 2065 and 2968 respectively. Section 3 of the Earth Removal Bylaw states that the owner of the lot must obtain the permit from the Board. There appear to be 4 lots with 3 owners, none of which are the applicant.*

Response: **The Earth Removal Application, as well as the Application for License, indicate the applicant as Riverrock Realty Trust as well as the owners of the land. The Application for License states the names of the "owners of the property to be licensed" as Southbrook Development, B & T Realty Trust and Bayside Agricultural. It is reasonably clear that the owners of the property have authorized Riverrock Realty Trust to apply for this permit.**

Section 1 of the Earth Removal By-Law defines the term "owner" as the owner of the land from which earth is sought to be removed.

Comment: *2. It appears that the intention of the proposal is to continue to utilize these street front lots for future residential development. This raises the issue of whether or not this is within the spirit of the Town's Zoning Bylaw. Exclusive use easements such as this have been done before, but not as an integral part of and Earth Removal Permit. Residence Rural (RR) Zoning requires 80,000 s.f. lots however approximately 40,000 s.f. of each of these lots would be exclusively used and controlled by others. The reservoir and steep earth removal slopes are located on the back ½ of each lot resulting in a 36' high drop-off with a steep, 2:1 slope and*

the 26' deep reservoir, also with 2:1 slopes on the lots themselves. These 2:1 slopes are steep and difficult to climb up; the reservoir would be impossible for children to climb out of in case of an emergency. The safety of locating the reservoir and steep slopes on house lots owned by private third parties is a concern, and the liability to the property owner is unknown.

Response: **The plan now shows the elimination of some lots and the reconfiguring of others. Two new Form A lots are now proposed, no portion of which will be impacted by the proposed cranberry bog construction project.**

Comment: *3. The Earth Removal Application Package requires that the earth removal be separated by a 200' buffer between it and the street and that abutting residence property be provided with 100' treed buffer. The plan shows that these 2 house lots provide a 204' buffer to the street, however, there is no 100' buffer shown. The front yard setback in the RR District is 50', so that the back yards of the homes built on these lots and possibly the homes themselves would be within 100' of the 36' high earthen slope.*

Response: **The buffer set back distances apply to existing lots. The owners of the property are all aware of the post construction site conditions.**

Comment: *4. It is the Planning Department's understanding that the property owners have evaluated two alternate development scenarios: earth removal with the ultimate construction of the 3.5 ac. cranberry bog; and, development of a 40B housing project. Although the entire property is mapped as Priority Habitat Area, the State's Natural Heritage and Endangered Species Program (NHESP) will allow alteration of up to 30% of such a site, with appropriate habitat migration. It appears that NHESP will allow the alteration of the 11.33 acres for the earth removal/cranberry bog and one could assume that a similar area would be allowed to be used for a 40B development; resulting in possibly 35±40B house lots. Because the direct abutter to this project is a large cranberry grower, Bayside Agricultural, Inc., and this property is within the proposed Thompson Street Agricultural Heritage Corridor, developing the site as a cranberry bog rather than a 40B housing project would be more appropriate, notwithstanding the comments below.*

Response: **The applicant and property owners have been, and continue to, work closely with the Natural Heritage Endangered Species Program (NHESP) on this project. They are negotiating options. NHESP has not yet made a final decision on the project. Each project is weighed on its own individual merits, so it is fair to assume they will do the same in this instance.**

Comment: *5. The proposed earth removal project bags the question of whether the proposed earth removal is accessory to cranberry bog construction (agriculture) or is cranberry bog construction the accessory use? As you are aware, earth removal and mining are not*

allowed uses by the Town's Zoning Bylaw; agriculture is, and it is accepted that the earth removal is a necessary accessory to that. The existing elevation in the vicinity of the proposed reservoir is the highest point on the property, 92.0 The reservoir will be excavated to elevation 14.0, 20' into groundwater, resulting in a vertical cut of 78' of earth to be removed. The location of the proposed bog has an average elevation of 82.0, with a finished bog grade of 38.0, resulting in a vertical cut of 44'. The application identifies that 743,512 cubic yards will be removed in order to build a 3.5 acre cranberry bog. According to local cranberry growers, the market for cranberries is currently very low especially for independent growers who are not part of the Ocean Spray Cooperative. Many growers are losing money annually, and as a result are choosing to sell their bogs to the USDA for conversion back into wetlands. Although the project applicant represents a sand and gravel company, the Planning Department understand that the completed cranberry bog will be conveyed to the abutter, Bayside Agricultural, an Ocean Spray Grower.

Response: **Once constructed, a cranberry bog will produce fruit in excess of 100 years. During this time frame the market will experience the ups and downs of any industry. A cranberry bog generally meets its maximum productivity in its fifth (5th) year of production. This is between 8 & 9 years from the current date and continues on for 100 years or more. The duration of the earth removal is less than 10% of the life of the cranberry bog, which will provide revenue to the grower for generations. The earth removal is incidental to, and necessary, to bog construction.**

Comment: *6. There are a number of alternative locations on the site for the bogs and reservoir which would minimize the amount of earth to be removed. The one which best coordinates with the abutting Bayside bogs would be to keep the proposed bog in its general location but shifted slightly southeast to avoid involvement of the house lots and relocate the reservoir which is now on the bogs northeast side to the southeast side of it. The existing elevation of the land in this southeast location is 62.0. not 92.0, reducing the amount of earth needed to be removed by 30 vertical feet. The most important benefit from this relocation is that the street front lots would not be included in the project any longer and would be buffered from the earth removal impacts.*

Response: **Refer to comment No. 2. Bayside Agricultural has had significant input into this design. The design, as presently submitted, illustrates the best alternative from a cranberry growing perspective.**

I trust the foregoing adequately responds to comments raised.

Very truly yours,

William F. Madden, PE

WFM/jld

Enclosure

cc: Joe Arruda
Southbrook Development Inc.
Bayside Agricultural Inc.
B & T Realty Trust
Middleborough Planning Board
Charles Cristello, Town Manager
Richard Tabaczynski, ADE

Town of Middleborough
Massachusetts

PLANNING DIRECTOR
Ruth McCawley Geoffroy

Planning Board

Telephone (508) 946-2425
Fax (508) 946-1991

January 24, 2014

Stephen J. McKinnon, Chairman
Middleborough Board of Selectmen
10 Nickerson Avenue
Middleborough, MA 02346

Re: Earth Removal Permit, 288 Thompson Street

Honorable Board,

The Planning Department is in receipt of an Earth Removal Application for 288 Thompson Street for construction of a 3.53 acre cranberry bog with an associated 23 ac.-ft. reservoir. The proposed plan raises policy concerns that the Town should be aware of, which may merit some discussion.

1. The Project Locus includes 2 street front Form A lots and at least 1 future retreat lot owned by others, Assessors Map 33 Lots 2146, 2065 and 2968 respectively. Section 3 of the Earth Removal Bylaw states that the owner of the lot must obtain the permit from the Board. There appear to be 4 lots with 3 owners, none of which are the applicant.

2. It appears that the intention of the proposal is to continue to utilize these street front lots for future residential development. This raises the issue of whether or not this is within the spirit of the Town's Zoning Bylaw. Exclusive use easements such as this have been done before, but not as an integral part of an Earth Removal Permit. Residence Rural (RR) Zoning requires 80,000 s.f. lots however approximately 40,000 s.f. of each of these lots would be exclusively used and controlled by others. The reservoir and steep earth removal slopes are located on the back ½ of each lot resulting in a 36' high drop-off with a steep, 2:1 slope and the 26' deep reservoir, also with 2:1 slopes on the lots themselves. These 2:1 slopes are steep and difficult to climb up; the reservoir would be impossible for children to climb out of in the case of an emergency. The safety of locating the reservoir and steep slopes on house lots owned by private third parties is a concern, and the liability to the property owner is unknown.

3. The Earth Removal Application Package requires that the earth removal be separated by a 200' buffer between it and the street and that abutting residential property be provided with a 100' treed buffer. The plan shows that these 2 house lots provide a 204' buffer to the street, however, there is no 100' buffer shown. The front yard setback in the RR District is 50', so that the back yards of the homes built on these lots and possibly the homes themselves would be within 100' of the 36' high earthen slope.

4. It is the Planning Department's understanding that the property owners have evaluated two alternate development scenarios: earth removal with the ultimate construction of the 3.5 ac. cranberry bog; and, development of a 40B housing project. Although the entire property is mapped as Priority Habitat Area, the State's Natural Heritage and Endangered Species Program (NHESP) will allow alteration of up to 30% of such a site, with appropriate habitat mitigation. It appears that NHESP will allow the alteration of 11.33 acres for the earth removal/cranberry bog and one could assume that a similar area would be

allowed to be used for a 40B development; resulting in possibly 35± 40B house lots. Because the direct abutter to this project is a large cranberry grower, Bayside Agricultural, Inc., and this property is within the proposed Thompson Street Agricultural Heritage Corridor, developing the site as a cranberry bog rather than a 40B housing project would be more appropriate, notwithstanding the comments below.

5. This proposed earth removal project begs the question of whether the proposed earth removal is accessory to cranberry bog construction (agriculture) or is cranberry bog construction the accessory use? As you are aware, earth removal and mining are not allowed uses by the Town's Zoning Bylaw; agriculture is, and it is accepted that earth removal is a necessary accessory to that. The existing elevation in the vicinity of the proposed reservoir is the highest point on the property, 92.0. The reservoir will be excavated to elevation 14.0, 20' into groundwater, resulting in a vertical cut of 78' of earth to be removed. The location of the proposed bog has an average elevation 82.0, with a finished bog grade of 38.0, resulting in a vertical cut of 44'. The application identifies that 743,512 cubic yards will be removed in order to build a 3.5 acre cranberry bog. According to local cranberry growers, the market for cranberries is currently very low especially for independent growers who are not part of the Ocean Spray Cooperative. Many growers are losing money annually, and as a result are choosing to sell their bogs to the USDA for conversion back into wetlands. Although the project applicant represents a sand and gravel company, the Planning Department understands that the completed cranberry bog will be conveyed to the abutter, Bayside Agricultural, an Ocean Spray Grower.

6. There are a number of alternative locations on the site for the bogs and reservoir which would minimize the amount of earth to be removed. The one which best coordinates with the abutting Bayside bogs would be to keep the proposed bog in its general location but shifted slightly southeast to avoid involvement of the house lots and relocate the reservoir which is now on the bog's northeast side to the southeast side of it. The existing elevation of the land in this southeast location is 62.0, not 92.0, reducing the amount of earth needed to be removed by 30 vertical feet. The most important benefit from this relocation is that the street front lots would not be included in the project any longer and would be buffered from the earth removal impacts.

Again, these are more policy considerations than comments on the design of the project. I have spoken to Rich Tabaczynski, of ADE, and he is reviewing the engineering issues related to the earth removal.

If you have any questions or wish to discuss this matter further please do not hesitate to contact me.

Sincerely,

Ruth McCawley Geoffroy, AICP
Middleborough Planning Director

Cc: Middleborough Planning Board
Charles Cristello, Town Manager
Patricia Cassady, Conservation Agent
Robert Whalen, Building Commissioner
Jeanne Spalding, Health Officer
Richard Tabaczynski, ADE
William Madden, GAF Engineering
Joseph Arruda, Bridgewater Sand and Gravel
Peter Beaton, Bayside Agricultural, Inc.