MIDDLEBOROUGH
NEMASKET RIVER IMPROVEMENTS

STATE	FED. AID PROJ. NO.	SHEET NO.	TOTAL SHEETS
MASS.	STP-0025(337)X	4	16
PROJECT FILE NO.	605878		

CONSTRUCTION PLAN
MAYFLOWER AVENUE

EROSION CONTROL
SEE BELOW

GRADING
SEE BELOW

DRAINAGE
SEE BELOW

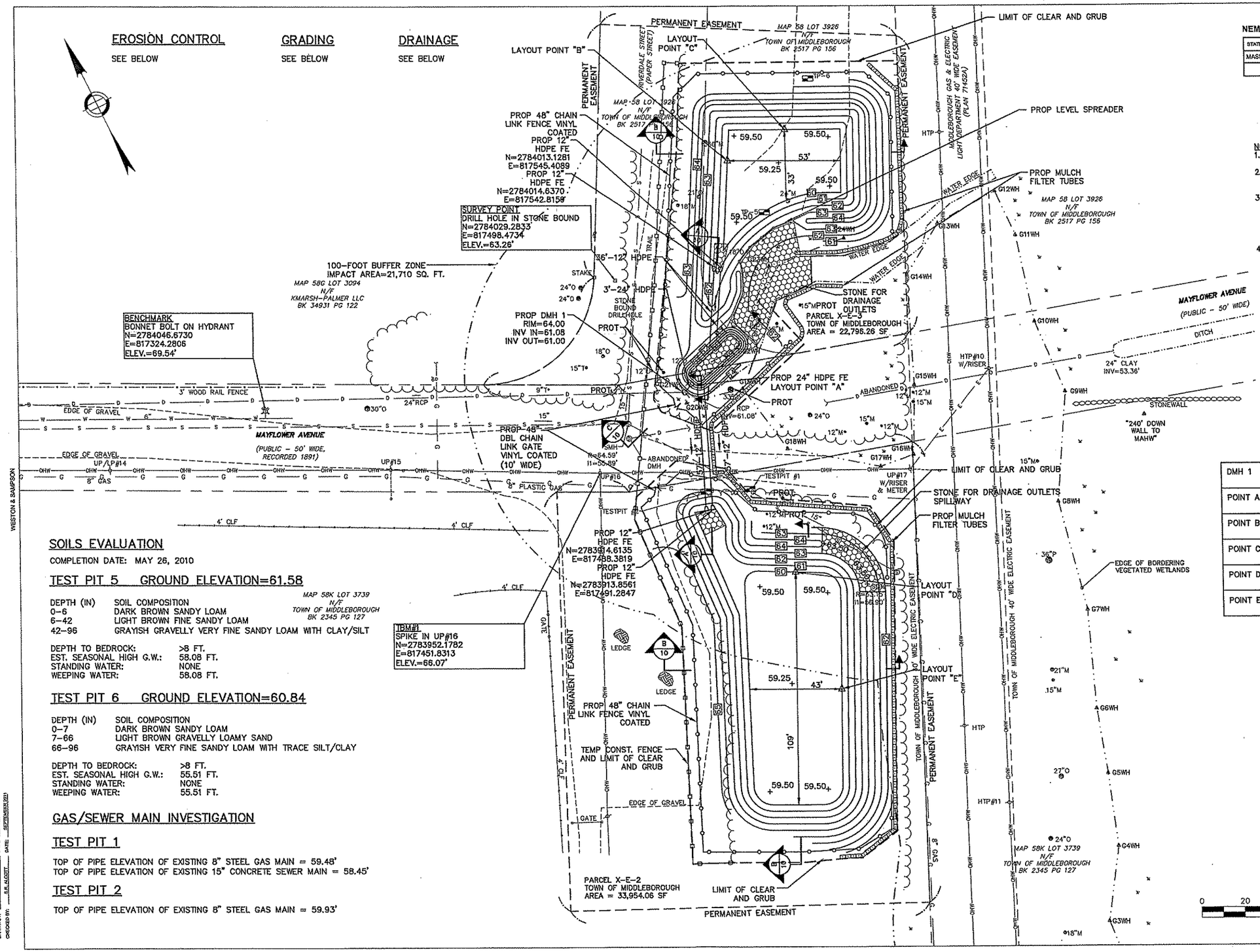

NOTES:
1. SEE SHEET NO. 10 FOR STRUCTURE INVERTS AND ELEVATIONS.
2. COORDINATES GIVEN FOR FLARED ENDS ARE FOR THE MIDPOINT OF THE END OF THE FLARED END.
3. CONTRACTOR SHALL INSTALL TWO ADDITIONAL ROWS OF MULCH FILTER TUBES AS CHECK DAMS ACROSS THE DITCH BED TO PREVENT EROSION DURING CONSTRUCTION.
4. THE CONTRACTOR SHALL BE AWARE OF THE PRIVATE PROPERTY ADJACENT TO THE CONSTRUCTION SITE (E.G. MAP 58G, LOT 3094) AND SHALL IMPLEMENT WHATEVER TECHNIQUES REQUIRED TO STAY WITHIN THE PERMITTED AREAS.

WATER QUALITY BASIN LAYOUT TABLE

DMH 1	N: 2783968.5483 E: 817504.0680	
POINT A	N: 2783970.8866 E: 817509.5914	
POINT B	N: 2784056.2892 E: 817570.8676	
POINT C	N: 2784057.5720 E: 817601.4494	
POINT D	N: 2783871.0232 E: 817512.5310	
POINT E	N: 2783812.8039 E: 817507.2973	

SOILS EVALUATION

COMPLETION DATE: MAY 26, 2010

TEST PIT 5 GROUND ELEVATION=61.58

DEPTH (IN)	SOIL COMPOSITION
0-6	DARK BROWN SANDY LOAM
6-42	LIGHT BROWN FINE SANDY LOAM
42-96	GRAYISH GRAVELLY VERY FINE SANDY LOAM WITH CLAY/SILT

DEPTH TO BEDROCK:	>8 FT.
EST. SEASONAL HIGH G.W.:	58.08 FT.
STANDING WATER:	NONE
WEEPING WATER:	58.08 FT.

TEST PIT 6 GROUND ELEVATION=60.84

DEPTH (IN)	SOIL COMPOSITION
0-7	DARK BROWN SANDY LOAM
7-66	LIGHT BROWN GRAVELLY LOAMY SAND
66-96	GRAYISH VERY FINE SANDY LOAM WITH TRACE SILT/CLAY

DEPTH TO BEDROCK:	>8 FT.
EST. SEASONAL HIGH G.W.:	55.51 FT.
STANDING WATER:	NONE
WEEPING WATER:	55.51 FT.

GAS/SEWER MAIN INVESTIGATION

TEST PIT 1

TOP OF PIPE ELEVATION OF EXISTING 8" STEEL GAS MAIN = 59.48'
TOP OF PIPE ELEVATION OF EXISTING 15" CONCRETE SEWER MAIN = 58.45'

TEST PIT 2

TOP OF PIPE ELEVATION OF EXISTING 8" STEEL GAS MAIN = 59.93'

WESTON & SAMPSON

IN CHARGE: L. KERSAK
DRAWN BY: A. PECK DATE: SEPTEMBER 2011
CHECKED BY: S.K. ALCOTT DATE: SEPTEMBER 2011

SOILS EVALUATION

COMPLETION DATE: MAY 26, 2010

TEST PIT 1 GROUND ELEVATION=56.92

DEPTH (IN)	SOIL COMPOSITION
0–39	FILL (CONSISTING OF BRICK AND ASH)
39–42	ORGANICS
42–50	LIGHT BROWN COARSE SANDY LOAM
50–65	GRAY FINE SAND WITH TRACE SILT/CLAY MOTTLING FROM 56 IN. TO 65 IN.
65–90	REDDISH BROWN SAND

DEPTH TO BEDROCK: >7.5 FT.
EST. SEASONAL HIGH G.W.: 52.25 FT.
STANDING WATER: 46.92 FT.
WEEPING WATER: NONE

MAP 58D LOT 1565
N/F
MIDDLEBOROUGH HOUSING AUTHORITY
BK 4021 PG 172

TEST PIT 2 GROUND ELEVATION=55.46

DEPTH (IN) SOIL COMPOSITION
* TEST PIT UNSAFE – SIDEWALLS UNDERMINING

STANDING WATER: NONE
WEEPING WATER: 5 FT.

EROSION CONTROL GRADING DRAINAGE

SEE BELOW SEE BELOW SEE BELOW

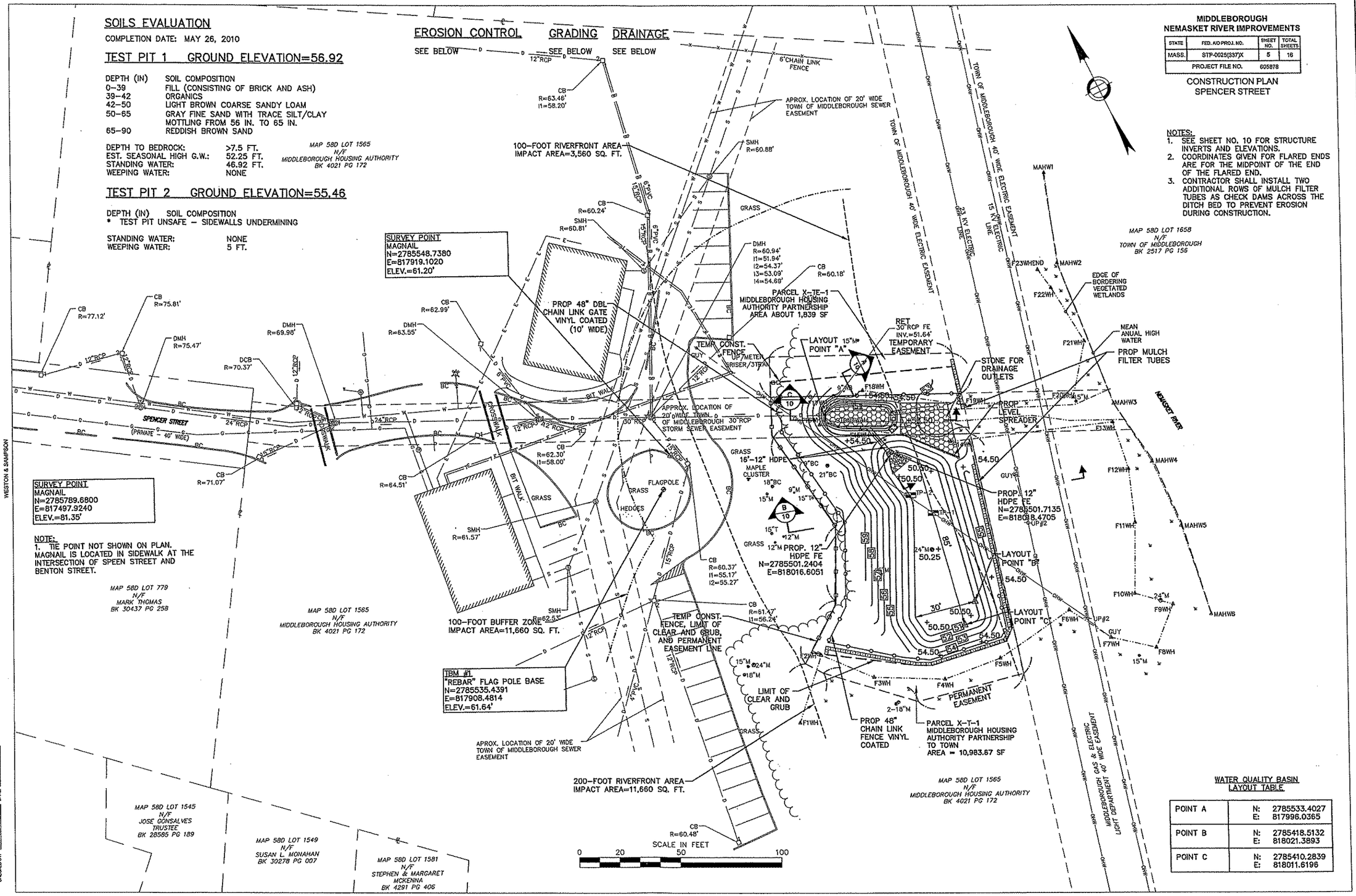

MIDDLEBOROUGH
NEMASKET RIVER IMPROVEMENTS

STATE	FED. AID PROJ. NO.	SHEET NO.	TOTAL SHEETS
MASS.	STP-0025(337)X	5	16
PROJECT FILE NO. 605878			

CONSTRUCTION PLAN
SPENCER STREET

NOTES:
1. SEE SHEET NO. 10 FOR STRUCTURE INVERTS AND ELEVATIONS.
2. COORDINATES GIVEN FOR FLARED ENDS ARE FOR THE MIDPOINT OF THE END OF THE FLARED END.
3. CONTRACTOR SHALL INSTALL TWO ADDITIONAL ROWS OF MULCH FILTER TUBES AS CHECK DAMS ACROSS THE DITCH BED TO PREVENT EROSION DURING CONSTRUCTION.

WESTON & SAMPSON

IN CHARGE: L. KERSCHER
DRAWN BY: A. BECK DATE: SEPTEMBER 2011
CHECKED BY: S.R. ALCOTT DATE: SEPTEMBER 2011

WATER QUALITY BASIN
LAYOUT TABLE

POINT A	N: 2785533.4027 E: 817996.0365
POINT B	N: 2785418.5132 E: 818021.3893
POINT C	N: 2785410.2839 E: 818011.6196

WATER ALTERATION	DRAINAGE	PAVEMENT MARKINGS	GRADING	EROSION CONTROL
SEE BELOW	SEE BELOW	SEE BELOW	SEE BELOW	SEE BELOW

MIDDLEBOROUGH
NEMASKET RIVER IMPROVEMENTS

STATE	FED. AID PROJ. NO.	SHEET NO.	TOTAL SHEETS
MASS.	STP-0025(337)X	8	16
PROJECT FILE NO.	605878		

CONSTRUCTION PLAN
EAST MAIN STREET

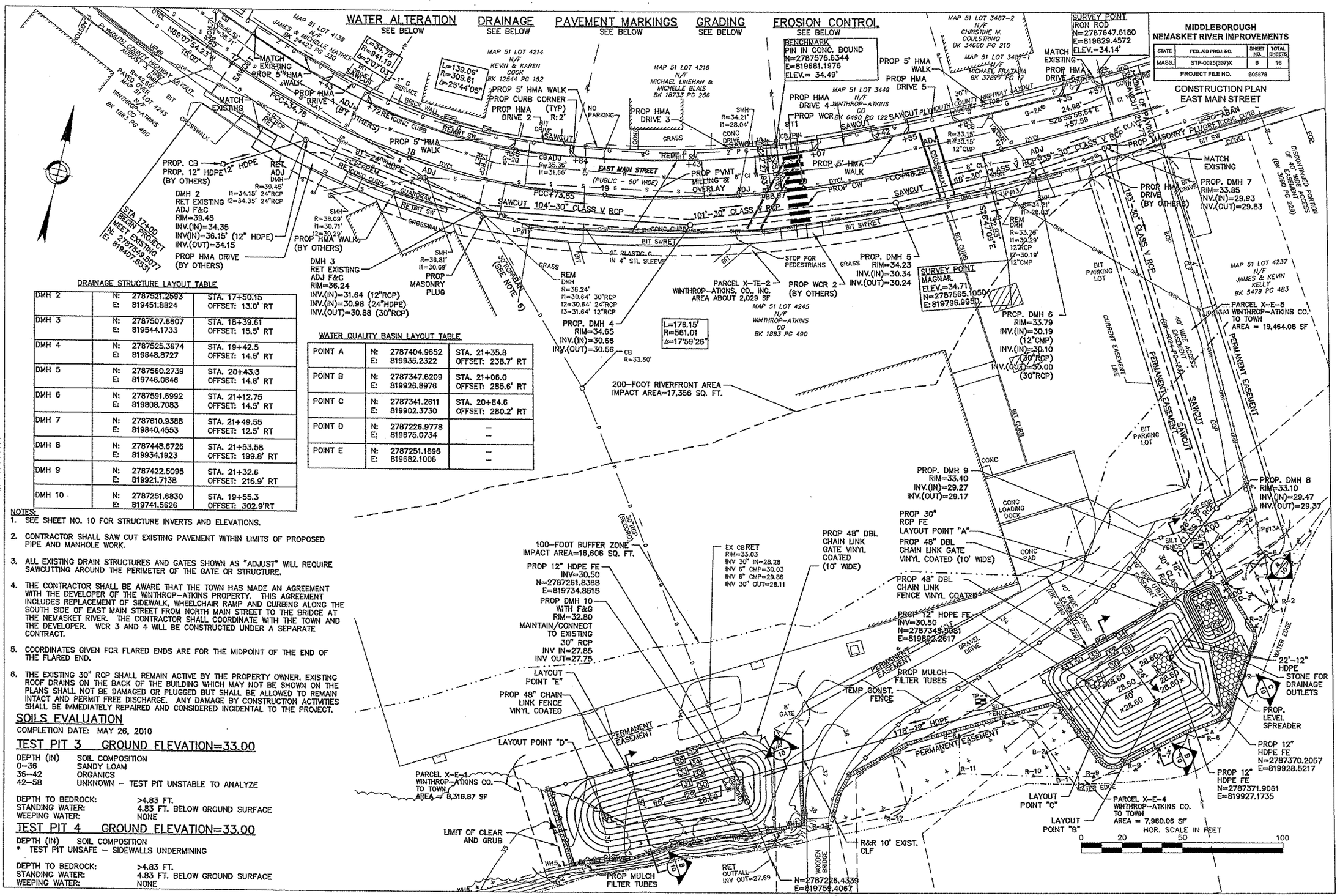

DRAINAGE STRUCTURE LAYOUT TABLE

DMH 2	N: 2787521.2593 E: 819451.8824	STA. 17+50.15 OFFSET: 13.0' RT
DMH 3	N: 2787507.6607 E: 819544.1733	STA. 18+39.61 OFFSET: 15.5' RT
DMH 4	N: 2787525.3674 E: 819648.8727	STA. 19+42.5 OFFSET: 14.5' RT
DMH 5	N: 2787560.2739 E: 819746.0646	STA. 20+43.3 OFFSET: 14.8' RT
DMH 6	N: 2787591.6992 E: 819808.7083	STA. 21+12.75 OFFSET: 14.5' RT
DMH 7	N: 2787610.9388 E: 819840.4553	STA. 21+49.55 OFFSET: 12.5' RT
DMH 8	N: 2787448.6726 E: 819934.1923	STA. 21+53.58 OFFSET: 199.8' RT
DMH 9	N: 2787422.5095 E: 819921.7138	STA. 21+32.6 OFFSET: 216.9' RT
DMH 10	N: 2787251.6830 E: 819741.5626	STA. 19+55.3 OFFSET: 302.9'RT

WATER QUALITY BASIN LAYOUT TABLE

POINT A	N: 2787404.9652 E: 819935.2322	STA. 21+35.8 OFFSET: 238.7' RT
POINT B	N: 2787347.6209 E: 819926.8976	STA. 21+06.0 OFFSET: 285.6' RT
POINT C	N: 2787341.2611 E: 819902.3730	STA. 20+84.6 OFFSET: 280.2' RT
POINT D	N: 2787226.9778 E: 819675.0734	– –
POINT E	N: 2787251.1696 E: 819682.1006	– –

NOTES:

1. SEE SHEET NO. 10 FOR STRUCTURE INVERTS AND ELEVATIONS.
2. CONTRACTOR SHALL SAW CUT EXISTING PAVEMENT WITHIN LIMITS OF PROPOSED PIPE AND MANHOLE WORK.
3. ALL EXISTING DRAIN STRUCTURES AND GATES SHOWN AS "ADJUST" WILL REQUIRE SAWCUTTING AROUND THE PERIMETER OF THE GATE OR STRUCTURE.
4. THE CONTRACTOR SHALL BE AWARE THAT THE TOWN HAS MADE AN AGREEMENT WITH THE DEVELOPER OF THE WINTHROP-ATKINS PROPERTY. THIS AGREEMENT INCLUDES REPLACEMENT OF SIDEWALK, WHEELCHAIR RAMP AND CURBING ALONG THE SOUTH SIDE OF EAST MAIN STREET FROM NORTH MAIN STREET TO THE BRIDGE AT THE NEMASKET RIVER. THE CONTRACTOR SHALL COORDINATE WITH THE TOWN AND THE DEVELOPER. WCR 3 AND 4 WILL BE CONSTRUCTED UNDER A SEPARATE CONTRACT.
5. COORDINATES GIVEN FOR FLARED ENDS ARE FOR THE MIDPOINT OF THE END OF THE FLARED END.
6. THE EXISTING 30" RCP SHALL REMAIN ACTIVE BY THE PROPERTY OWNER. EXISTING ROOF DRAINS ON THE BACK OF THE BUILDING WHICH MAY NOT BE SHOWN ON THE PLANS SHALL NOT BE DAMAGED OR PLUGGED BUT SHALL BE ALLOWED TO REMAIN INTACT AND PERMIT FREE DISCHARGE. ANY DAMAGE BY CONSTRUCTION ACTIVITIES SHALL BE IMMEDIATELY REPAIRED AND CONSIDERED INCIDENTAL TO THE PROJECT.

SOILS EVALUATION

COMPLETION DATE: MAY 26, 2010

TEST PIT 3 GROUND ELEVATION=33.00

DEPTH (IN)	SOIL COMPOSITION
0–36	SANDY LOAM
36–42	ORGANICS
42–58	UNKNOWN – TEST PIT UNSTABLE TO ANALYZE

DEPTH TO BEDROCK: >4.83 FT.
STANDING WATER: 4.83 FT. BELOW GROUND SURFACE
WEEPING WATER: NONE

TEST PIT 4 GROUND ELEVATION=33.00

DEPTH (IN)	SOIL COMPOSITION
* TEST PIT UNSAFE – SIDEWALLS UNDERMINING	

DEPTH TO BEDROCK: >4.83 FT.
STANDING WATER: 4.83 FT. BELOW GROUND SURFACE
WEEPING WATER: NONE

WESTON & SAMPSON

IN CHARGE: E. KERSAN
DRAWN BY: A. RICK DATE: SEPTEMBER 2011
CHECKED BY: S.R. ALCOTT DATE: SEPTEMBER 2011

MIDDLEBOROUGH
NEMASKET RIVER IMPROVEMENTS

STATE	FED. AID PROJ. NO.	SHEET NO.	TOTAL SHEETS
MASS.	STP-0025(337)X	8	16
PROJECT FILE NO.	605978		

CONSTRUCTION PLAN
FISH LADDER WALL

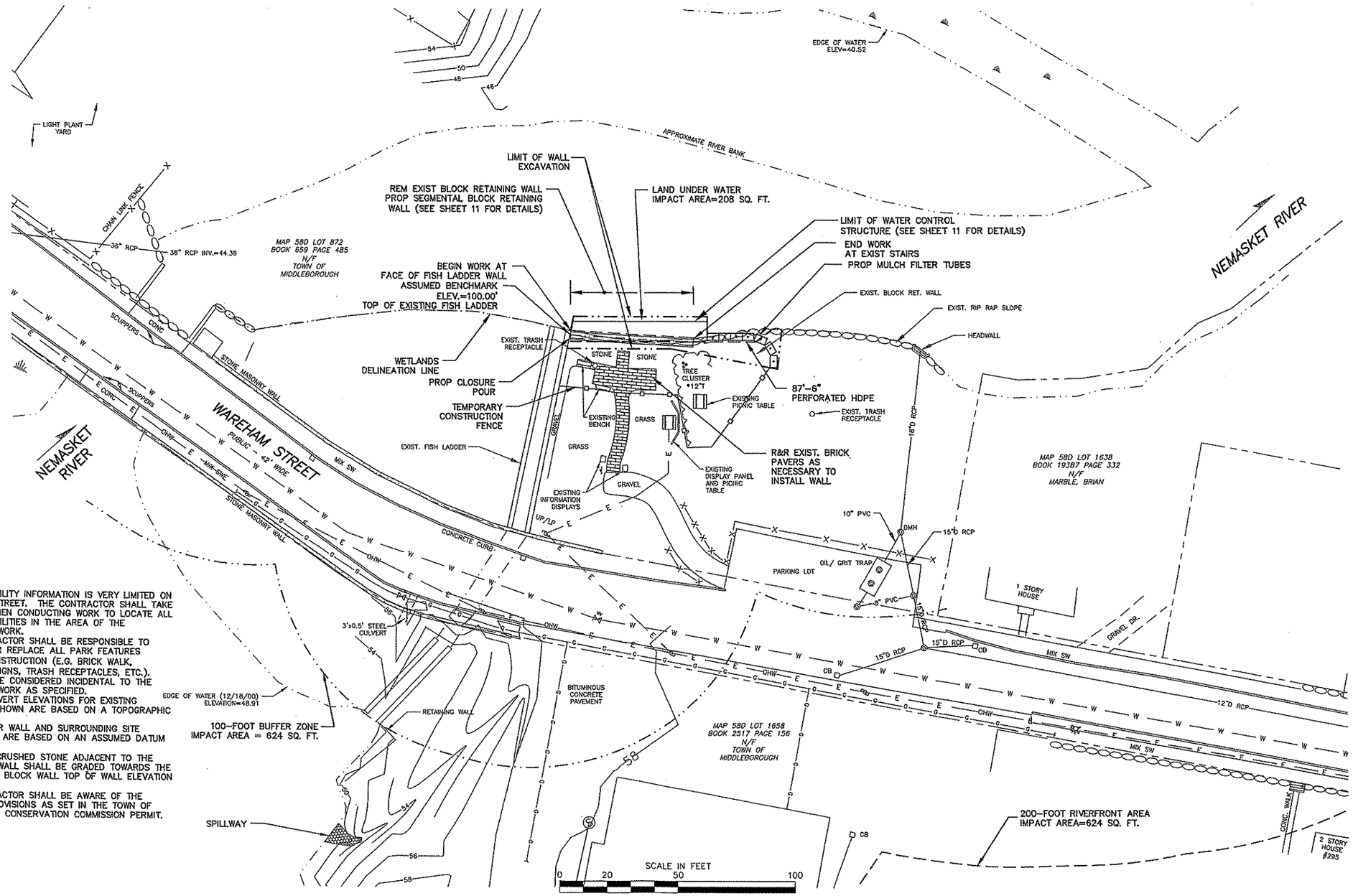

NOTES:

1. EXISTING UTILITY INFORMATION IS VERY LIMITED ON WAREHAM STREET. THE CONTRACTOR SHALL TAKE CAUTION WHEN CONDUCTING WORK TO LOCATE ALL EXISTING UTILITIES IN THE AREA OF THE PROPOSED WORK.
2. THE CONTRACTOR SHALL BE RESPONSIBLE TO PROTECT OR REPLACE ALL PARK FEATURES DURING CONSTRUCTION (E.G. BRICK WALK, BENCHES, SIGNS, TRASH RECEPTACLES, ETC.). THIS WILL BE CONSIDERED INCIDENTAL TO THE PROPOSED WORK AS SPECIFIED.
3. RIM AND INVERT ELEVATIONS FOR EXISTING DRAINAGE SHOWN ARE BASED ON A TOPOGRAPHIC SURVEY.
4. FISH LADDER WALL AND SURROUNDING SITE ELEVATIONS ARE BASED ON AN ASSUMED DATUM OF 100.00'.
5. THE AREA CRUSHED STONE ADJACENT TO THE PROPOSED WALL SHALL BE GRADED TOWARDS THE NEW WALL. BLOCK WALL TOP OF WALL ELEVATION = 99.00'.
6. THE CONTRACTOR SHALL BE AWARE OF THE SPECIAL PROVISIONS AS SET IN THE TOWN OF MIDDLEBORO CONSERVATION COMMISSION PERMIT.

WESTON & SAMPSON

IN CHARGE: L. JESSIGAN
DRAWN BY: A. PICK DATE: SEPTEMBER 2001
CHECKED BY: S.A. ALCOTT DATE: SEPTEMBER 2001

	MAYFLOWER		SPENCER	EAST MAIN	
SECTION A–A	NORTH	SOUTH		EAST	WEST
"A"	SEE PLAN				
"B"	5'	5'	3'	5'	
"C"	5'		5'	5'	
"D"	5'		5'	5'	
"E"	2'	2'	1'	1'	
"F"	2'	4'	3'	4'	
"G"	41'	53'	9'	18'	
"H"	24"		30"	30"	
SECTION C–C					
"H"	24"		30"	30"	
"I"	19'		18'	25'	
"J"	4.5'		4.5'	4.5'	
"K"	10'		12'	5'	
"L"	4'		10'	18'	
"M"	2'		2'	2'	
"N"	1'		1'	1'	
"O"	15'		15'	15'	
ELEVATIONS					
ELEV. 1	60.90'		51.50'	29.20'	
ELEV. 2	59.00'		49.50'	28.50'	
ELEV. 3	60.90'	61.20'	51.40'	29.10'	
ELEV. 4	60.68'	60.90'	51.32'	29.00'	
ELEV. 5	64.00	64.00	54.50	34.00	
ELEV. 6	62.80'	N/A	53.30'	32.80'	
ELEV. 7	63.00'		53.50'	33.00'	

NOTE:
1. ALL MEASUREMENTS ARE TO BE USED AS GUIDANCE. MINOR CHANGES TO THESE ARE ALLOWABLE AS APPROVED BY THE ENGINEER. IF LEDGE OR OTHER OBSTACLES ARE ENCOUNTERED, CHANGES IN BASIN SHAPE SHALL BE REFLECTED IN THE RECORD DRAWINGS.
2. THE MAYFLOWER SOUTH BASIN WILL NOT HAVE A LEVEL SPREADER.

WATER QUALITY BASIN LAYOUT TABLE
N.T.S.

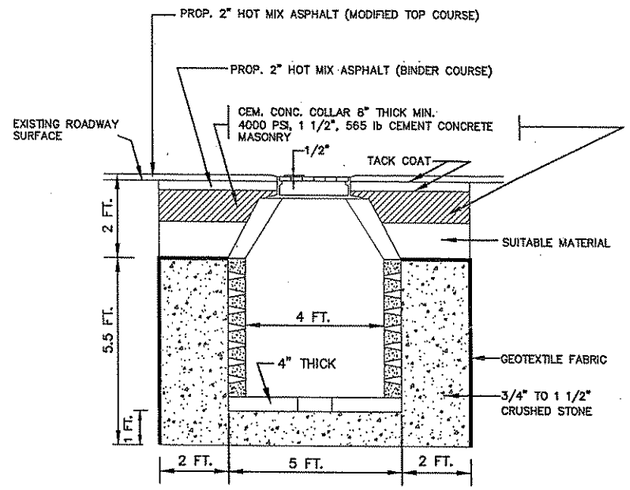

SECTION VIEW

NOTES:
1.) CEMENT CONCRETE FOR LEACHING BASIN SHALL BE 4000 PSI, 1 1/2", 565 lb.
2.) IF CONCRETE BLOCK, WALL THICKNESS = 6"
3.) IF REINFORCED/PRECAST, WALL THICKNESS = 5" MIN.

LEACHING BASIN DETAIL
N.T.S.

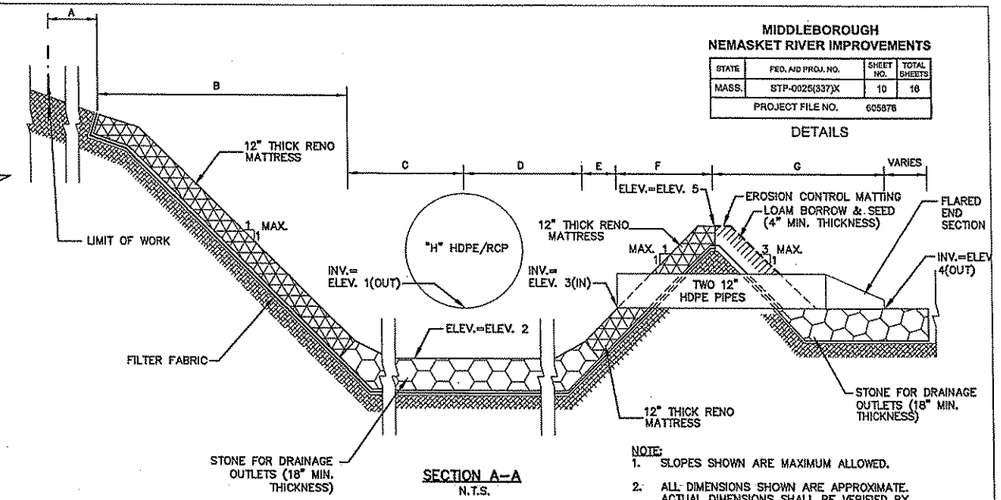

SECTION A–A
N.T.S.

NOTE:
1. SLOPES SHOWN ARE MAXIMUM ALLOWED.
2. ALL DIMENSIONS SHOWN ARE APPROXIMATE. ACTUAL DIMENSIONS SHALL BE VERIFIED BY CONTRACTOR.

MIDDLEBOROUGH
NEMASKET RIVER IMPROVEMENTS

STATE	FED. AID PROJ. NO.	SHEET NO.	TOTAL SHEETS
MASS.	STP-0025(337)X	10	16
PROJECT FILE NO.	605878		

DETAILS

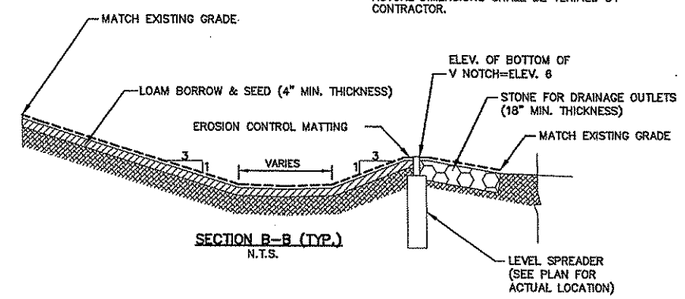

SECTION B–B (TYP.)
N.T.S.

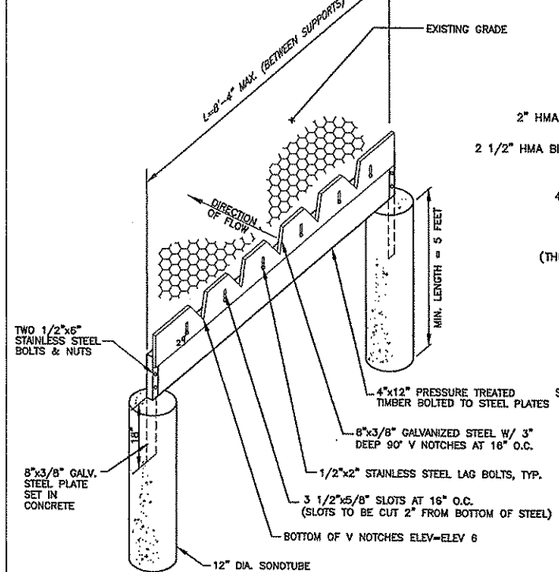

LEVEL SPREADER SCHEMATIC CONSTRUCTION DETAIL
N.T.S.

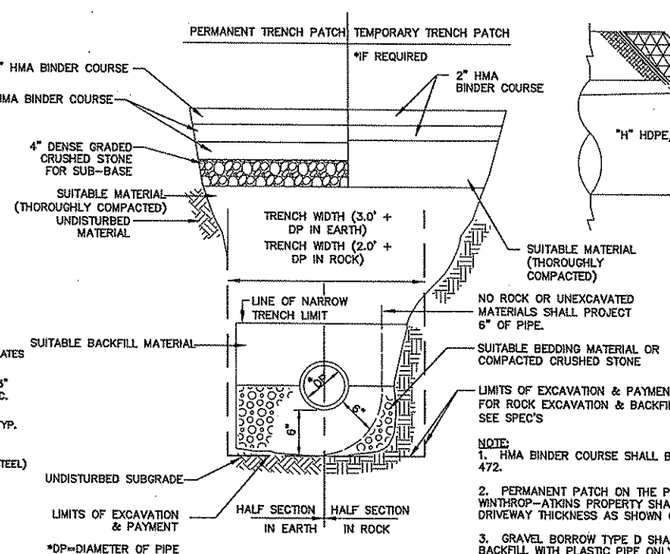

*DP=DIAMETER OF PIPE

TRENCH DETAIL
N.T.S.

NOTE:
1. HMA BINDER COURSE SHALL BE PAID UNDER ITEM 472.
2. PERMANENT PATCH ON THE PARKING LOT ON WINTHROP–ATKINS PROPERTY SHALL MATCH THE DRIVEWAY THICKNESS AS SHOWN ON SHEET 11.
3. GRAVEL BORROW TYPE D SHALL BE USED FOR BACKFILL WITH PLASTIC PIPE ONLY. GRAVEL BORROW TYPE B SHALL BE USED FOR ALL RCP IF EXISTING MATERIAL IS UNSUITABLE FOR BACKFILL. THIS SHALL BE CONSIDERED INCIDENTAL TO THE ITEM.

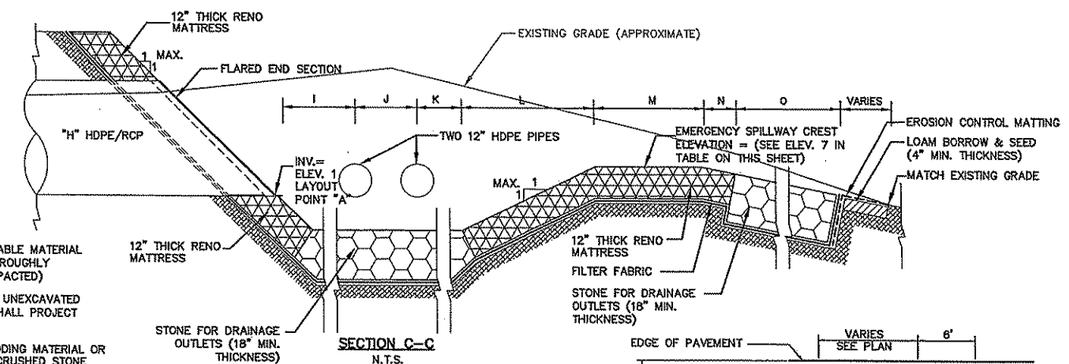

SECTION C–C
N.T.S.

NOTE:
1. SLOPES SHOWN ARE MAXIMUM ALLOWED.
2. ALL DIMENSIONS SHOWN ARE APPROXIMATE. ACTUAL DIMENSIONS SHALL BE VERIFIED BY CONTRACTOR.

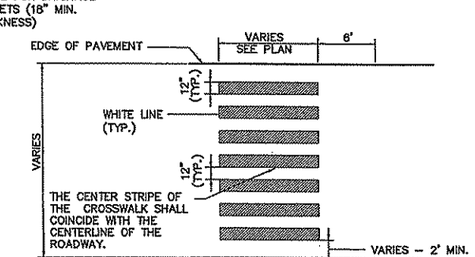

CROSSWALK MARKING DETAIL
N.T.S.

WESTON & SAMPSON

IN CHARGE: L. DOYCHAK
DRAWN BY: A. PEPCK DATE: SEPTEMBER 2011
CHECKED BY: S.R. ALGOTT DATE: SEPTEMBER 2011

GENERAL NOTES:

1. THE CONTRACTOR SHALL SUBMIT ALL PERTINENT DESIGN INFORMATION OF THE SEGMENTAL RETAINING WALL SYSTEM TO MASSDOT FOR APPROVAL.
2. THE WALL IS TO BE BUILT STRAIGHT STARTING AT THE FISH LADDER AND PROCEEDING DOWN STREAM TO THE EXISTING STAIRS.
3. THE CONTRACTOR SHALL TAKE ALL MEASURES NECESSARY TO PROTECT THE EXISTING PARK FURNITURE AND PAVING BRICKS FROM DAMAGE. THE CONTRACTOR MAY REMOVE THE PARK FURNITURE AND BRICK PAVERS TO PERFORM THE WORK AS NECESSARY. WHEN THE WORK IS COMPLETE, ANY PARK FURNITURE AND BRICK PAVERS ARE TO BE REINSTALLED IN THEIR PRIOR LOCATIONS, AT NO ADDITIONAL COST TO THE OWNER.
4. THE CONTRACTOR SHALL INSTALL MULCH FILTER TUBES AS SHOWN ON THE DRAWING BEFORE STARTING WITH ANY ACTIVITIES.
5. THE CONTRACTOR IS RESPONSIBLE FOR THE WATER CONTROL STRUCTURE. EXISTING BLOCKS AND SAND BAGS OR OTHER COFFERDAM MATERIALS MAY BE USED TO CONTROL THE WATER. THE CONTRACTOR SHALL SUBMIT TO THE ENGINEER AND THE MIDDLEBORO CONSERVATION COMMISSION FOR APPROVAL, A SET OF WORKING DRAWINGS DESCRIBING MATERIALS AND METHODS OF CONTROLLING WATER. SHEET PILING SHALL NOT BE USED.
6. THE CONTRACTOR SHALL NOT BLOCK THE FLOW TO THE FISH LADDER.
7. THE WATER LEVEL SHOWN ON THE PLAN IS APPROXIMATE TOP OF WATER AS OBSERVED ON JUNE 5, 2006.

MATERIALS:

CONCRETE SEGMENTAL UNITS

1. THE CONCRETE FOR THE SEGMENTAL RETAINING WALL BLOCKS SHALL HAVE A MINIMUM COMPRESSIVE STRENGTH f'c = 4000 PSI AT 28 DAYS.
2. THE CONCRETE SHALL HAVE 4.5–7.5% AIR ENTRAINMENT.
3. THE FACE OF EACH UNIT SHALL HAVE A TEXTURED FINISH SIMILAR TO GRANITE.

DRAINAGE PIPE

1. THE DRAINAGE COLLECTION PIPE SHALL BE A PERFORATED OR SLOTTED, PVC OR CORRUGATED HDPE PIPE.
2. THE PROPOSED 6" DRAINAGE PIPE SHOULD CONFORM TO SECTION 260 AS SHOWN IN THE LATEST SUPPLEMENTAL SPECIFICATIONS, SECTION M5 OF THE LATEST STANDARD SPECIAL PROVISIONS AND CONSTRUCTION STANDARD E 209.10.

DRAINAGE AGGREGATE

1. THE DRAINAGE AGGREGATE SHALL BE A CLEAN ¾" CRUSHED STONE.

GEOTEXTILE FILTER

1. THE DRAINAGE GEOTEXTILE FILTER SHALL MEET THE REQUIREMENTS OF TABLE III OF THE MASSACHUSETTS HIGHWAY DEPARTMENT SPECIFICATION SECTION M9.50.0.

CONSTRUCTION NOTES:

1. ALL EXCAVATION MUST BE DONE IN THE DRY.
2. A MINIMUM 8" THICK LAYER OF ¾" CRUSHED STONE ON TOP OF A GEOTEXTILE FILTER FABRIC IS TO BE USED AS A LEVELING PAD FOR THE SEGMENTAL BLOCK WALL.
3. THE BASE ROW OF BLOCKS SHALL BE SET SO THAT THE BACK OF THE BLOCK IS ½" LOWER THAN THE FRONT OF THE BLOCK.
4. ALL MATERIALS SHALL BE INSTALLED AS SHOWN ON THE CONSTRUCTION PLAN. BROKEN, CHIPPED, STAINED OR OTHERWISE DAMAGED UNITS SHALL NOT BE PLACED IN THE WALL UNLESS THEY ARE REPAIRED AND THE REPAIR APPROVED BY THE OWNER.
5. DRAINAGE FILL SHALL BE PLACED TO THE MINIMUM FINISHED THICKNESS AND WIDTHS SHOWN ON THE CONSTRUCTION PLANS.
6. PER MASSDOT SPECIFICATIONS, BACKFILL MATERIAL SHALL BE PLACED IN LIFTS NOT TO EXCEED 6 INCHES.
7. ONLY HAND–OPERATED COMPACTION EQUIPMENT SHALL BE ALLOWED WITHIN 3 FEET OF THE BACK OF THE SEGMENTAL RETAINING WALL BLOCKS.
8. CONTRACTOR SHALL PROVIDE A CAST IN PLACE CONCRETE CLOSURE POUR BETWEEN THE EXISTING FISH LADDER AND PROPOSED WALL. CONCRETE SHALL BE ¾" 4,000 PSI CONCRETE MIX. PROVIDE PREFORM FILLER EXPANSION JOINT THE FULL LENGTH OF THE CLOSURE POUR IN BETWEEN POUR AND EXISTING FISH LADDER.

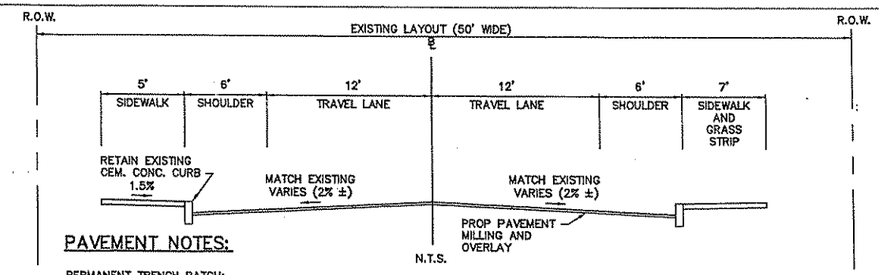

PAVEMENT NOTES:

PERMANENT TRENCH PATCH:
2" HOT MIX ASPHALT BINDER MATERIAL OVER 2½" HOT MIX ASPHALT BINDER COURSE MATERIAL OVER 2½" HOT MIX ASPHALT BINDER MATERIAL OVER 4" DENSE GRADED CRUSHED STONE FOR SUB–BASE OVER SUITABLE BACKFILL MATERIAL.

TEMPORARY TRENCH PATCH:
2" HOT MIX ASPHALT BINDER MATERIAL OVER 2" HOT MIX ASPHALT BINDER MATERIAL OVER SUITABLE BACKFILL MATERIAL.

PAVEMENT MILLING AND OVERLAY:
2" HOT MIX ASPHALT – MODIFIED TOP COURSE WITH BITUMEN FOR TACK COAT (RS–1) AT 0.07 GAL/SY OVER VARIABLE DEPTH (2" MINIMUM) MILLED SURFACE. BITUMEN OVER SMOOTH SURFACES SHALL BE PLACED AT A RATE OF 0.05 GAL/SY.

HOT MIX ASPHALT SIDEWALK
2.5" HOT MIX ASPHALT (1.25" HOT MIX ASPHALT TOP COURSE OVER 1.25" HOT MIX ASPHALT BINDER COURSE) OVER 8" GRAVEL BASE COURSE.

HOT MIX ASPHALT DRIVEWAY:
3.5" HOT MIX ASPHALT (1.5" HOT MIX ASPHALT TOP COURSE OVER 2" HOT MIX ASPHALT BINDER COURSE) OVER 8" GRAVEL BASE COURSE.

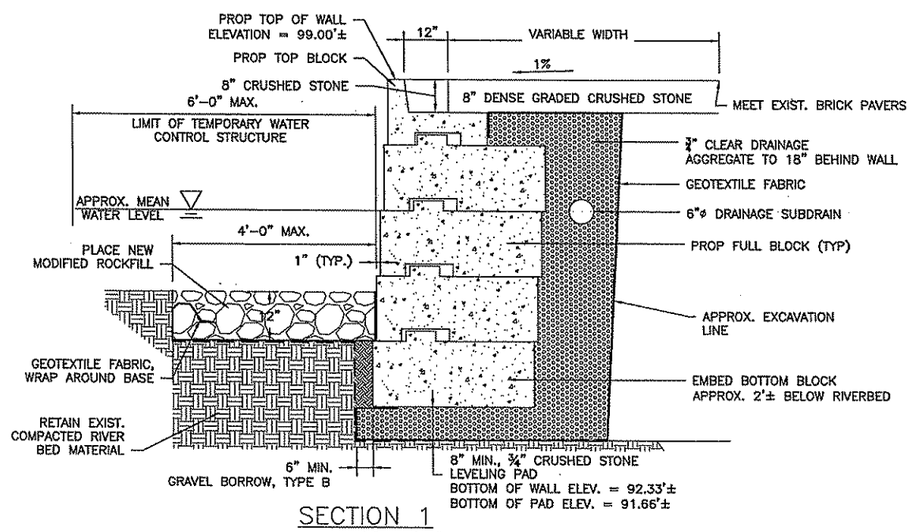

SECTION 1
SCALE: 3/4" = 1'–0"

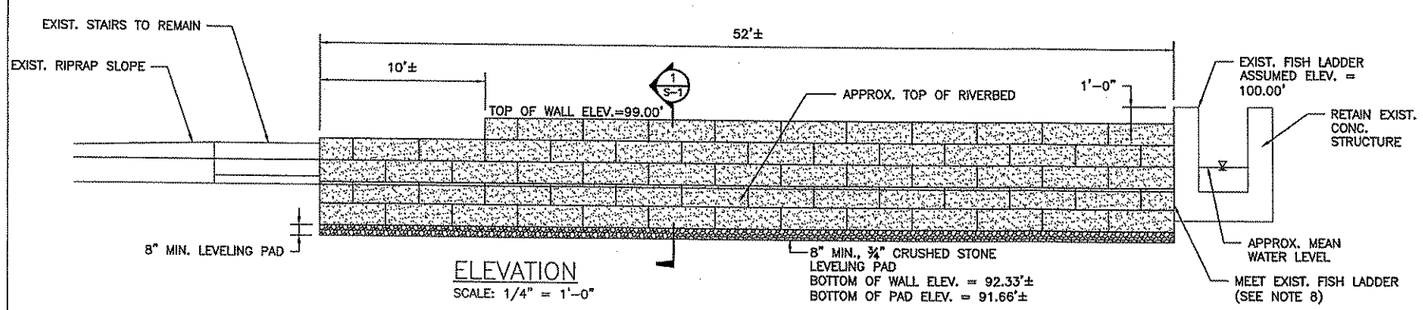

ELEVATION
SCALE: 1/4" = 1'–0"

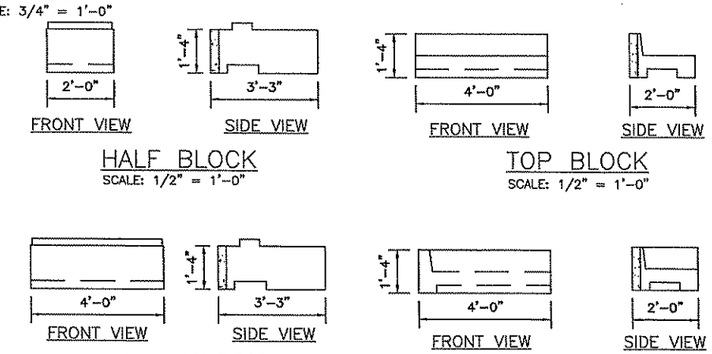

MIDDLEBOROUGH
NEMASKET RIVER IMPROVEMENTS

STATE	FED. AID PROJ. NO.	SHEET NO.	TOTAL SHEETS
MASS.	STP-0025(337)X	11	16
PROJECT FILE NO. 605878			

DETAILS

WESTON & SAMPSON

IN CHARGE: L. MESSAK
DRAWN BY: A. FOX DATE: SEPTEMBER 2011
CHECKED BY: R.A. LAGOTT DATE: SEPTEMBER 2011

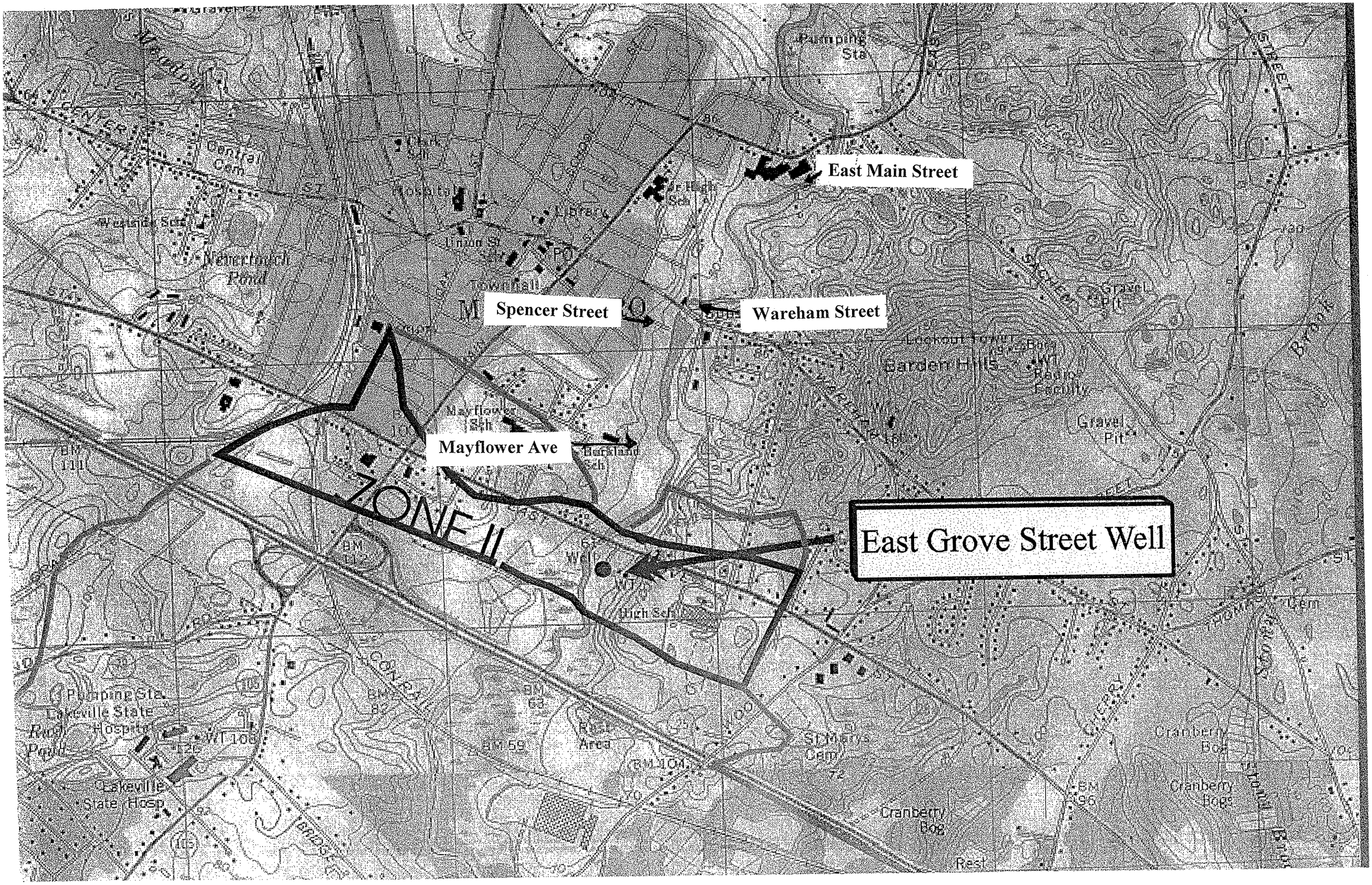
East Main Street
Spencer Street
Wareham Street
Mayflower Ave
ZONE II
East Grove Street Well
Pumping Sta
Central Cem
Hospital
Library
Union St
Townhall
Westside Sch
Nevertouch Pond
Mayflower Sch
Burkland Sch
Lookout Tower
Garden Hills
Radio Facility
Gravel Pit
High Sch
Rest Area
St Marys Cem
Cranberry Bog
Cranberry Bogs
Lakeville State Hospital
Lakeville State Hosp
Rush Pond
Brook