CORRESPONDENCE
08/22/16

CORRESPONDENCE
8-22-16

1	Library Trustees	Minutes
2	Building Permits by Month	Building Inspectors Office
3	Oliver Advisory Committee	Minutes
4	Marc R. Pacheco	Letter regarding $25,000 to improve Animal Shelter
5	Marc R. Pacheco	Letter regarding the passage of S. 2090
6	Serenity Rest Home	Change of Ownership
7	Robert Buker - Health Department	MEMA Grant award of $3490
8	Oliver Advisory Committee	Draft Drawings

#1

The Trustees of the Middleborough Public Library met on July 11, 2016. In attendance were George Davey, Edward Pratt, Eleanor Osborne, Stephen Conway, James Okolita, Keith Macdonald, Maryanna Abren, and Library Director Jason Bloom.

Chairman Okolita called the meeting to order at 6:06 p.m.

The Minutes of June 13 were accepted as presented.

The Treasurer's Report was accepted, subject to audit.

Under "Unanticipated Business", Ellie noted that the Skype program with Diana Nyad had gone very well.

The following information was covered in the Director's Report:

- The landscaper has done a great job, both with the lawn and with keeping everything clean.
- The air conditioning is running on one condenser but seems to be doing fine. Repair costs are down from last year.
- Painting of the Peirce Street entrance was pushed back to the end of July (Gilson Painting Phase 1).
- The Friends will host their Annual Yard Sale on Saturday, September 10.
- They are looking for donations.
- Summer Reading is going very well – signups are up by 30% over last year, and participation is up 40%.
- Amanda Meyer's YMCA outreach has been successful. There has been an increase in card sign-ups across the board.
- The library will host "Bellydance for Fun and Fitness" with the Crescent Dancers on July 16th. This program is sponsored by the Friends of the Middleborough Public Library.
- On Wednesday, July 20th, the Library will host a Fun Bus, and will have a Bike Safety workshop as well. The parking lot will be closed from 10a.m. to 12 p.m.

The next meeting is scheduled for August 8, 2016 at 6:00 p.m.

Trustees voted to go into Executive Session at 6:51 p.m. for the purpose of discussing personnel issues, and not to return to Open Session.

The meeting adjourned at 7:36 p.m.

Respectfully submitted,

Maryanna B. Abren

Maryanna B. Abren

<u>Handouts</u>

Agenda

Minutes from 6/13/16

Treasurer's Report (balances as of 6/1/16)

Director's Report

#2

TOWN OF MIDDLEBOROUGH BUILDING PERMITS BY MONTH

1/1/2016 Through 7/30/2016

Building Type	Jan	Feb	Mar	Apr	May	Jun	Jul	Aug	Sep	Oct	Nov	Dec	Totals
Single Family Home	3	2	11	5	7	1	2						**31**
	445,000	332,000	1,816,297	943,501	1,041,300	155,240	371,000						**5,104,338**
	5,460.00	4,064.00	22,235.00	11,522.00	12,776.00	1,902.00	4,532.00						**62,491.00**
Garage		2	2	1	1	4	1						**11**
		91,000	90,304	11,900	40,000	168,800	36,900						**438,904**
		1,092.00	1,084.00	143.00	480.00	2,005.00	443.00						**5,247.00**
Porches & Decks		3	2	4	6	8	8						**31**
		6,500	5,500	30,892	154,850	52,991	45,950						**296,683**
		110.00	80.00	354.00	1,779.00	320.00	436.00						**3,079.00**
Wood St/Chim/Fpl													**0**
													0
													0.00
Mobile Home	6					3	2						**11**
	744,000					372,000	248,000						**1,364,000**
	9,168.00					4,584.00	3,056.00						**16,808.00**
Condo/ Units													**0**
													0
													0.00
Apartments						72	1						**73**
						5,704,583							**5,704,583**
						68,475.67							**68,475.67**
Demo													**0**
													0
													0.00
Commercial Building			2			2	2						**6**
			272,186			1,059,912	133,390						**1,465,488**
			3,340.00			12,770.00	1,600.00						**17,710.00**
Commercial Addition/Renovation	5	5	4	3	8	5	9						**39**
	114,415	169,455	49,185	565,575	206,450	70,000	1,895,950						**3,071,030**
	1,483.00	2,094.00	669.00	6,944.00	2,592.00	930.00	12,462.00						**27,174.00**

TOWN OF MIDDLEBOROUGH BUILDING PERMITS BY MONTH

1/1/2016 Through 7/30/2016

Building Type	Jan	Feb	Mar	Apr	May	Jun	Jul	Aug	Sep	Oct	Nov	Dec	Totals
Sign													0
													0
													0.00
Temp Mobile Home						1							1
						2,000							2,000
						40.00							40.00
Pool		1	2	6	3	7	2						21
		30,500	73,000	58,300	76,500	72,000	6,000						316,300
		366.00	876.00	500.00	885.00	864.00	80.00						3,571.00
Addition / Renovation	13	20	27	32	39	44	35						210
	264,141	383,301	540,340	582,647	371,021	354,624	455,694						2,951,768
	2,333.00	3,877.00	6,163.00	6,723.00	3,977.00	3,983.00	4,463.00						31,519.00
Shed			3		1	2	1						7
			22,295		3,500	20,700	4,200						50,695
			179.00		40.00	80.00	40.00						339.00
Barn/Stable					1								1
					5,000								5,000
					60.00								60.00
Foundation			1										1
													0
													0.00
State	4	10	15	4	5	6	1						45
													0
	40.00	355.00	770.00	120.00	236.00	240.00	40.00						1,801.00
Agricultural Building													0
													0
													0.00
Copies													0
													0
													0.00

TOWN OF MIDDLEBOROUGH BUILDING PERMITS BY MONTH

1/1/2016 Through 7/30/2016

Building Type	Jan	Feb	Mar	Apr	May	Jun	Jul	Aug	Sep	Oct	Nov	Dec	Totals
Temp Trailer			1										**1**
			2,294										**2,294**
			100.00										**100.00**
Temp Carnival													**0**
													0
													0.00
Trench	11	7	10	10	9	9	7						**63**
						8,000							**8,000**
	220.00	140.00	230.00	200.00	160.00	200.00	140.00						**1,290.00**
Single Family Amended													**0**
													0
													0.00
Antenna/Tower		2	1	1	1		1						**6**
		41,730	188,000	20,000	60,000								**309,730**
		501.00	2,256.00	240.00	720.00		50.00						**3,767.00**
Site Inspection													**0**
													0
													0.00
Temp Tent				1		2							**3**
				3,000		2,500							**5,500**
				40.00		80.00							**120.00**
Sheet Metal	4	9	11	5	8	7	2						**46**
	22,890	90,050	85,000	36,900	65,050	45,000	15,167						**360,057**
	120.00	330.00	440.00	210.00	320.00	290.00	80.00						**1,790.00**
Multi Family Dwelling							1						**1**
							30,000						**30,000**
							360.00						**360.00**
Two Family Dwelling													**0**
													0
													0.00

TOWN OF MIDDLEBOROUGH BUILDING PERMITS BY MONTH

1/1/2016 Through 7/30/2016

Building Type		Jan	Feb	Mar	Apr	May	Jun	Jul	Aug	Sep	Oct	Nov	Dec	Totals
Intense Home Occupation														0
														0
														0.00
Accessory Apartment						1								1
						50,500								50,500
						646.00								646.00
Sidewalk Obstruction				1										1
														0
				10.00										10.00
Ground Mounted Solar Array		1					2							3
		49,000					1,139,000							1,188,000
		588.00					13,728.00							14,316.00
Roof Top Solar Array			1	2	3	3								9
			25,000	81,207	185,021	1,496,500								1,787,728
			300.00	974.11	2,166.00	17,958.00								21,398.11
Totals	Permit Count:	47	62	95	75	93	175	75						622
	Value:	1,639,446	1,169,536	3,225,608	2,437,736	3,570,671	9,227,350	3,242,251						24,512,598
	Fees:	19,412.00	13,229.00	39,406.11	29,162.00	42,629.00	110,491.67	27,782.00						282,111.78

#3

From: Mary Dawson
Sent: Wednesday, August 03, 2016 12:55 PM
Subject: Minutes of July Meeting

The meeting of the Oliver Homestead Advisory Committee was held on July 7th at 10:00 AM at the Oliver Homestead. Members present were Leilani Dalpe, Jane Lopes, Tom Dexter, Kathy Foye, Paulette Lilla and Mary Dawson. Excused was David Bennett.Also present were Jane Kudcey, Amanda Berman, Jennifer /Goldson, Russ Feldman and Carolyn Gravelyn.
The minutes of the June meeting were approved. All guests were introduced. Noted was $174,000 in grant monies that were received for bathrooms and exterior work.It was noted that the septic system will be done at no cost and permanent ramps will be installed.
Mr Feldman was introduced and he called attention to the work needed on the roof, siding, sills and trim.He created a 3 tier project with 1) Has to be done, 2) historic requirements, 3) cost. Jenn and Russ discussed the time line for MAPP grand as work must be,finished by June 30 2017.Jenn will do time lines for architectural review and bathroom designs. Also included was cost of paint and mortar analysis. Must have these by July 25th BOS meeting.
Dave and Tom were reappointed to the committee and all standing officers were reelected.
The next meeting will be August 10th at 10:30AM in the Selectmen's Room at Town Hall.

Respectfully submitted,

Mary Dawson
Secretary

#4

The Commonwealth of Massachusetts
MASSACHUSETTS SENATE
OFFICE OF THE PRESIDENT PRO TEMPORE

SENATOR MARC R. PACHECO
PRESIDENT PRO TEMPORE
First Plymouth and Bristol District

STATE HOUSE, ROOM 312B
BOSTON, MA 02133-1053
TEL. (617) 722-1551

MARC.PACHECO@MASENATE.GOV
WWW.MASENATE.GOV

Chairman
SENATE COMMITTEE ON
GLOBAL WARMING AND CLIMATE CHANGE

Vice Chairman
JOINT COMMITTEE ON
TELECOMMUNICATIONS,
UTILITIES AND ENERGY

SENATE COMMITTEE ON
PERSONNEL AND ADMINISTRATION

August 1, 2016

Diane C. Stewart, Chairwoman
Middleborough Board of Selectmen
Town Hall
10 Nickerson Avenue
Middleborough, MA 02346

To Chairwoman Stewart and Members of the Board:

I am writing to inform you of an override of the Governor's budget veto concerning the Town of Middleborough. The Senate initiatives which I put forth, which were vetoed by the Governor, have been restored, providing funding to essential services which concern the Town of Middleborough, including $25,000 to improve services and facilities at the Middleborough Animal Shelter.

It is always a pleasure to work to support these important programs in my district. Should you have any questions or concerns, please do not hesitate to contact my office.

Sincerely,

Marc R. Pacheco
President Pro Tempore
Massachusetts State Senate

#5

SENATOR MARC R. PACHECO
PRESIDENT PRO TEMPORE
First Plymouth and Bristol District

STATE HOUSE, ROOM 312B
BOSTON, MA 02133-1053
TEL. (617) 722-1551

MARC.PACHECO@MASENATE.GOV
WWW.MASENATE.GOV

The Commonwealth of Massachusetts

MASSACHUSETTS SENATE

OFFICE OF THE PRESIDENT PRO TEMPORE

Chairman
SENATE COMMITTEE ON
GLOBAL WARMING AND CLIMATE CHANGE

Vice Chairman
JOINT COMMITTEE ON
TELECOMMUNICATIONS,
UTILITIES AND ENERGY

SENATE COMMITTEE ON
PERSONNEL AND ADMINISTRATION

July 30, 2016

Diane Stewart, Chairwoman
Middleborough Board of Selectmen
Middleborough Town Hall
10 Nickerson Avenue
Middleborough, MA 02346

To Chairwoman Stewart and Members of the Board of Selectmen:

I am writing to inform you of the passage of S. 2090, An Act authorizing the town of Middleborough to exchange certain parcels of conservation land. The bill was enacted and laid before the Governor on Saturday, July 30th. Going forward, the Governor has 10 days from that date to sign this bill into law or veto this legislation. If he takes no action, the legislation will automatically become law at the end of that period.

It is always a pleasure to file legislation on behalf of municipalities in my district. Should you have any questions or concerns, please do not hesitate to contact my office.

Sincerely,

Marc R. Pacheco
President Pro Tempore
Massachusetts State Senate

#6

Serenity Rest Home
98 South Main Street
Middleboro, Ma. 02346
Tel 508-947-2155 Fax 508-946-2626

July 29, 2016

To: Town Manager

Re: Notice of Pending Change of Ownership

To All Interested Parties:

This is to notify you that Serenity Rest Home, LLC. Has filed an application with the Massachusetts Department of Public Health to acquire Serenity Home, Inc. The Department requires us to notify you that Serenity Home Inc. ("Facility") is subject to a change in ownership.

Residents should not be concerned that they will lose their beds, since the proposed buyer has no plans to change any of the services currently provided or the number of resident beds.

The applicant, as required under state licensure regulations for nursing homes and rest homes, has published a notice that a public hearing on the proposed change of ownership may be requested upon a petition by a group of ten adults. Such petition shall include the name, address and signature of each adult. In addition, regardless of whether a public hearing is requested, written comments concerning the proposed change of ownership may be submitted to the Department. A petition for a public hearing or written comments should be sent to: Department of Public Health, Division of Health Care Facility Licensure and Certification, Suitability Review Office, 99 Chauncy Street, 11th Floor, Boston, MA 02111, within 14 days of the publication of the notice of the change of ownership. Please note that all written comments submitted to the Department may be posted on the Department's website and released in response to a request for public records.

If you have any comments or question regarding this pending sale, please feel free to speak to me directly, or write to the Department care of:

Suitability Review Office, Department of Public Health

Division of Health Care Facility Licensure and Certification

99 Chauncy Street, 11th

Boston, MA 02111

Sincerely

Steven Landolfi

#7

TOWN OF MIDDLEBOROUGH
HEALTH DEPARTMENT

Robert E. Buker
Health Officer

PH: 508-946-2408
FX: 508-946-2321

MEMO

TO: Board of Selectmen

FROM: Robert Buker

DATE: August 15, 2016

RE: MEMA Grant

The Health Department is pleased to announce that our Citizens Emergency Response Team has been awarded a $3,490.00 grant from MEMA. This was a competitive grant process.
The funds will be used to purchase an Automatic Electronic Defibrillator to replace the one currently at Town Hall, with the remaining funds going towards adding items to our shelter ready trailer at the Central Fire Station.

#8

From: Amanda Berman
Sent: Thursday, August 18, 2016 10:20 PM
To: Colleen Lieb; Selectman Diane C. Stewart
Cc: Jane Lopes; Selectman Leilani Dalpe
Subject: Oliver House RFQ for Accessibility Design Services - for BOS 8/22 mtg.

Dear Selectwoman Stewart and Colleen,

On behalf of the Oliver Estate Advisory Committee, I have attached the draft drawings for the Oliver House exterior stabilization and restoration work, provided by the preservation architect Russ Feldman. We are sharing these documents with the BOS as an fyi, as they detail the scope of work that is planned for this phase of the project, which the BOS reviewed and approved last spring.

Russ and his team are continuing to compile the corresponding technical and contract specifications for the draft bid package that is due to the Mass Historic Commission (MHC) by 8/31. There will be some back-and-forth with the MHC before they approve the bid documents. Once finalized and approved by the MHC, we plan to submit to the BOS for review and approval, prior to going out to bid. We hope to get you the final bid documents by the September BOS meeting.

Please let me know if you have any questions.

Thank you,

Amanda Berman
Senior Community Preservation Planner
JM Goldson
community preservation
+ planning
Boston, MA
amanda@jmgoldson.com

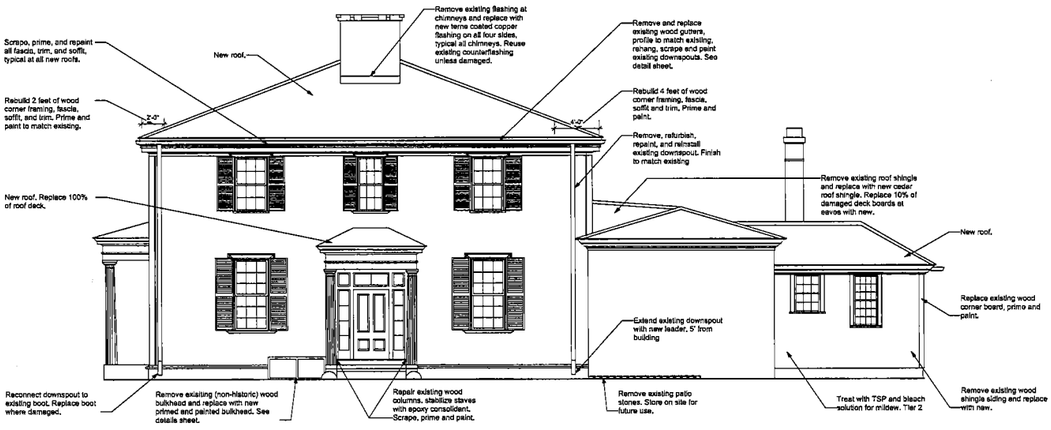

General Roof Notes
1. Remove existing roof shingle and replace with new cedar roof shingle. Replace damaged deck boards at eaves with new, estimated 10% unless otherwise noted.
2. Install new terne coated copper step flashing on all chimneys on all 4 sides. Reuse existing counterflashing unless damaged or as noted.

TBA ARCHITECTS, INC.
ARCHITECTURE
PLANNING
PROJECT MANAGEMENT
CLARKSBURG OFFICE
[illegible]
TELEPHONE: 413-663-3420
[illegible]

MIDDLEBOROUGH
OLIVER HOUSE

MIDDLEBOROUGH, MA

TOWN OF MIDDLEBOROUGH
10 NICKERSON AVE.
MIDDLEBOROUGH, MA

DRAWN BY	CHECKED BY	COPYRIGHT
CF	RF	2016

REVISIONS

DATE OF ISSUE
15, AUGUST, 2016

SCALE
3/4" = 1'0"
At 24x36 Size

NORTHEAST
ELEVATION

TBA PROJECT # 1231

A-1

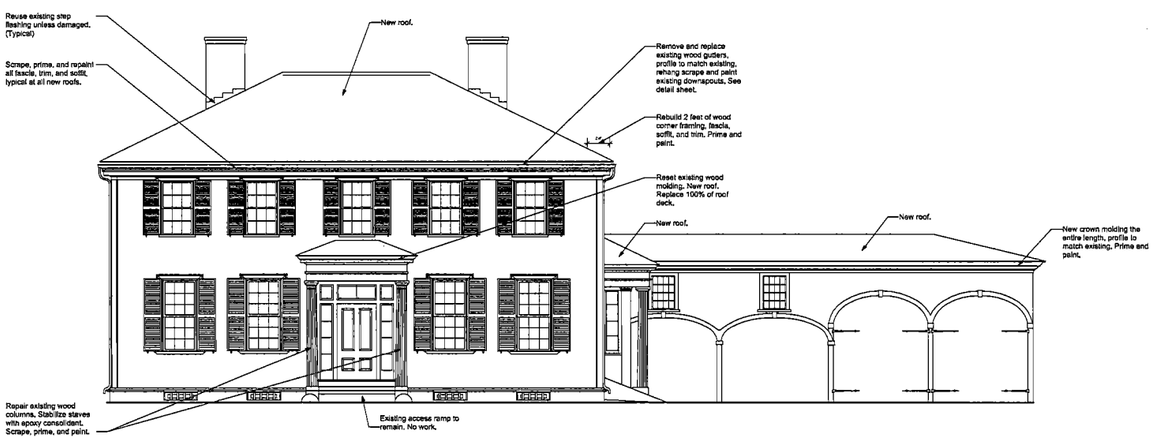

General Roof Notes - Tier 1

1. Remove existing roof shingle and replace with new cedar roof shingle. Replace damaged deck boards at eaves with new, estimated 10% unless otherwise noted.
2. Install new terne coated cooper step flashing on all chimneys on all 4 sides. Reuse existing counterflashing unless damaged or as noted.

TBA ARCHITECTS, INC.
ARCHITECTURE
PLANNING
PROJECT MANAGEMENT

MIDDLEBOROUGH OLIVER HOUSE

MIDDLEBOROUGH, MA

TOWN OF MIDDLEBOROUGH
10 NICKERSON AVE.
MIDDLEBOROUGH, MA

DRAWN BY	CHECKED BY	COPYRIGHT
CF	RF	2018

REVISIONS

DATE OF ISSUE
15, AUGUST, 2018

SCALE
1/4" = 1'0"
At 24x36 Size

SOUTHEAST ELEVATION

TBA PROJECT # 1281

A-2

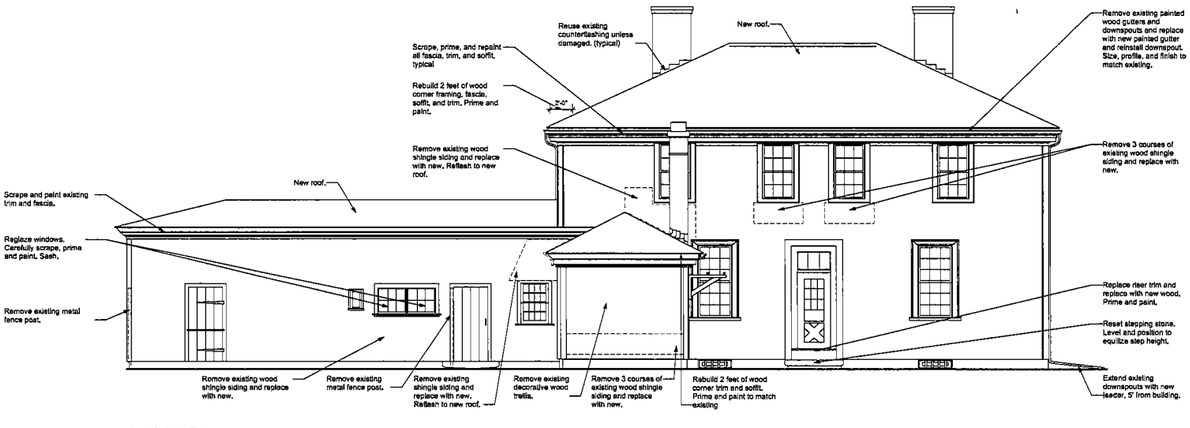

General Roof Notes - Tier 1

1. Remove existing roof shingle and replace with new cedar roof shingle. Replace damaged deck boards at eaves with new, estimated 10% unless otherwise noted.
2. Install new terne coated copper step flashing on all chimneys on all 4 sides. Reuse existing counterflashing unless damaged or as noted.

TBA ARCHITECTS, INC.
ARCHITECTURE
PLANNING
PROJECT MANAGEMENT
43 MANFORD STREET
CONCORD, MA 01742
TEL (978) 369-5624 FAX (978) 369-5634
www.tbaarchitects.com

MIDDLEBOROUGH
OLIVER HOUSE

MIDDLEBOROUGH, MA

TOWN OF MIDDLEBOROUGH
10 NICKERSON AVE.
MIDDLEBOROUGH, MA

DRAWN BY	CHECKED BY	COPYRIGHT
CF	RF	2016

REVISIONS

DATE OF ISSUE
15, AUGUST, 2016

SCALE
1/4" = 1'0"
At 24x36 Size

NORTHWEST
ELEVATION

TBA PROJECT # 1281

A-3

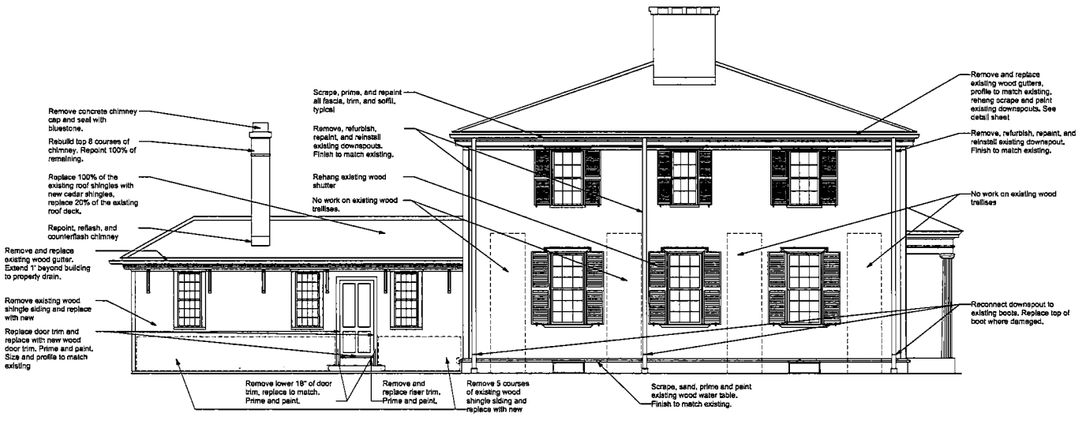

General Roof Notes - Tier 1

1. Remove existing roof shingle and replace with new cedar roof shingle. Replace damaged deck boards at eaves with new, estimated 10% unless otherwise noted.
2. Install new terne coated copper step flashing on all chimneys on all 4 sides. Reuse existing counterflashing unless damaged or as noted.

TBA ARCHITECTS, INC.
ARCHITECTURE
PLANNING
PROJECT MANAGEMENT
1 MARKGRAF STREET
CONCORD, MA 01742
TEL (781) 369-9700 FAX (781) 369-9701
www.tbaarch.com

MIDDLEBOROUGH
OLIVER HOUSE

MIDDLEBOROUGH,
MA

TOWN OF MIDDLEBOROUGH
10 NECKERSON AVE.
MIDDLEBOROUGH, MA

DRAWN BY	CHECKED BY	COPYRIGHT
CF	RF	2016

REVISIONS

DATE OF ISSUE
15. AUGUST, 2016

SCALE
1/4" = 1'0"
At 24x36 Size

SOUTHWEST
ELEVATION

TBA PROJECT # 1281

A-4

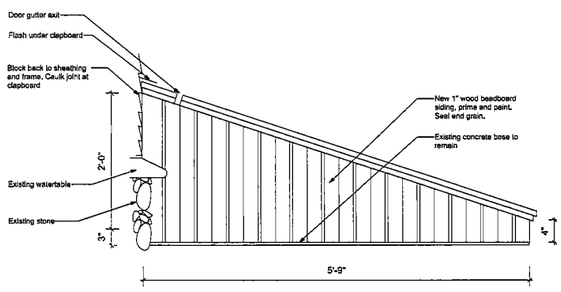

BULKHEAD SIDE ELEVATION
1-1/2" = 1'0"

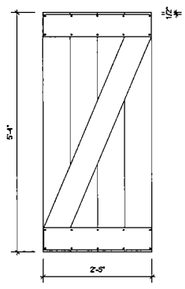

ELEVATION - BACK OF BULKHEAD DOOR
1" = 1'0"

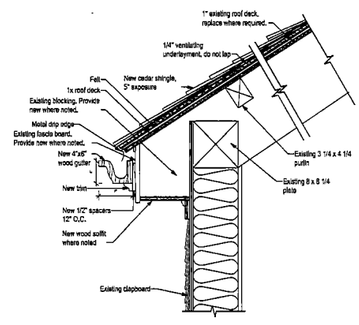

EAVE DETAIL
1-1/2" = 1'0"

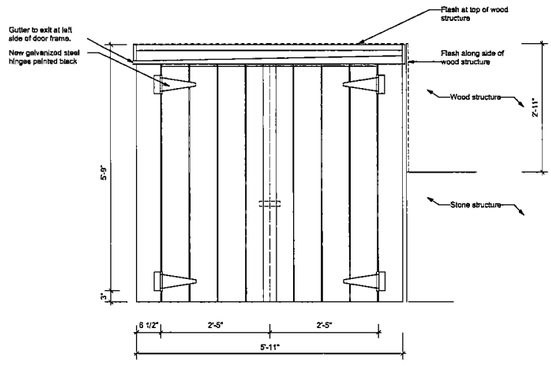

PLAN OF BULKHEAD
1" = 1'0"

- Remove doors, hinges, head board.
- Install new head board, trim, and flashing
- New boards shall be T&G cedar
- All exposed edges shall be eased
- All board sides & ends shall be primed
- All exposed wood to be painted

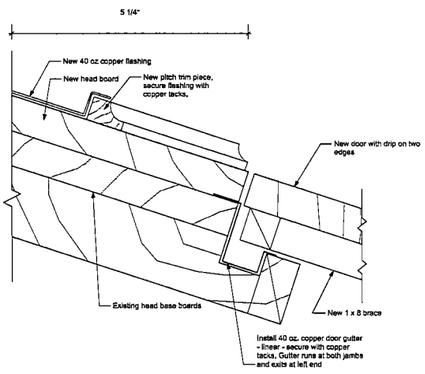

DOOR HEAD AND JAMB
FULL SCALE

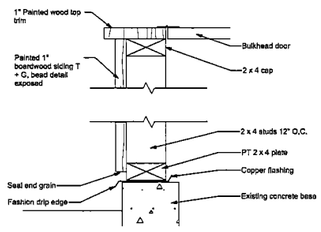

SECTION OF BULKHEAD WALL
3" = 1'0"

TBA ARCHITECTS, INC.
ARCHITECTURE
PLANNING
PROJECT MANAGEMENT
21 PLEASANT STREET
CONCORD, MA 01742
TEL (978) 371-0616 FAX (978) 371-0616 MOM
www.tbaarchitects.com

MIDDLEBOROUGH
OLIVER HOUSE

MIDDLEBOROUGH, MA

TOWN OF MIDDLEBOROUGH
10 NICKERSON AVE.
MIDDLEBOROUGH, MA

DRAWN BY	CHECKED BY	COPYRIGHT
CF	RF	2016

REVISIONS

DATE OF ISSUE
15, AUGUST, 2016

SCALE
AS NOTED
At 24x36 Size

GUTTER AND SOFFIT, BULKHEAD DETAILS

TBA PROJECT # 1251

A-5

Date: 8/15/16
File: 1251 Middleboro Oliver House 16-08-15.dwg