Middleborough High School Pedestrian Bridge

Report of Structural Feasibility Study

Prepared for the Town of Middleborough, MA

April 1, 2013

Steere Engineering Inc.
2374 Post Road, Suite 201
Warwick, RI 02886
401-773-7880

TABLE OF CONTENTS

Executive Summary

Introduction

- Purpose
- Structure Description

Field Observations

Concrete Testing

Discussion

- Findings
- Discussion of Chlorides in Concrete
- Calculations of Bridge Strength

Recommendations

- General Discussion
- Alternative 1: Repair the Bridge
- Alternative 2a: Replace the Bridge with a New Prefabricated Bridge
- Alternative 2b: Replace the Bridge with a New Paved Roadway on Bermed Earth Fill with MSE Retaining Wall
- Alternative 3: Perform No Repairs and Monitor/Shore the Bridge Structure
- Recommended Repairs to the Patio

Appendix

A. Detailed Field Observations
B. Photos
C. Concrete Test Results
D. Structural Calculations
E. Alternative 2a - Supporting Documents
F. Alternatives 2b - Supporting Documents

EXECUTIVE SUMMARY

Middleborough High School's concrete pedestrian bridge, built in 1971, provides access to the school's main entry and has many signs of deterioration, including spalled, delaminated and cracked concrete, and exposed and rusted steel reinforcement. This feasibility study was undertaken to observe in detail the existing condition of the bridge, to assess its integrity and to provide recommendations with budgetary level cost estimates for the School's use in future planning. The study primarily concerns the condition of the bridge, but observations of the patio area and estimate of costs to repair are included.

Steere Engineering made observations of the bridge in February 2013 and directed sampling and testing of the bridge's concrete to evaluate its strength and chloride content. High levels of chlorides were suspected because of the application of ice melting salts over the life of the bridge and confirmed by analysis of concrete samples. We performed calculations to verify that the strength of the bridge is adequate for the loads imposed by its use. We concluded that the bridge slab and beams, as designed and in good condition, can adequately support pedestrian loadings of 100 psf, as required by the Building Code. We also checked the bridge for the load of an HS-15 vehicle (a two axle vehicle with 6000 pounds on the steering axle and 24,000 pounds on the drive axle) and found the slab to be somewhat overloaded under vehicular loading and we recommend that vehicles not be permitted on the bridge until improvements are made.

Detailed observations of the bridge's condition are discussed in the body of the report. The most significant observations and findings include generalized cracking, spalling and exposed reinforcement, primarily at the underside of the bridge deck, and the measurement of high levels of chlorides near the bottom of the bridge deck discovered during testing. At the sides of the two main longitudinal beams, most of the beams' shear stirrups are exposed and rusting with spalling concrete, primarily the result of poor construction practices that placed the stirrups too close to the surface, providing as little as ¼ inch of concrete cover instead of the required minimum of 1 ½ inches. Some stress related cracking was observed: flexural cracking in the top of the slab over the pier and diagonal shear pattern cracking at the west longitudinal beam near the pier support.

The continuing deterioration of the bridge is the result of corrosion of the bridge's steel reinforcement. This corrosion is the result of a combination of factors including exposure to weather, freezing temperatures, the cumulative effect of many years of application of ice melting salts to the surface and deficiencies in the original construction of the bridge. Construction deficiencies resulted in extremely inadequate thicknesses of concrete over the reinforcing steel. Once deterioration has begun it continues at an accelerating rate making deterioration both more extensive and more costly to repair as time passes.

Regarding the bridge:

Recommendations: The bridge is clearly in need of repair to arrest deterioration and to restore its integrity. We recommend that the bridge be repaired or replaced. We also recommend that vehicles are not permitted on the bridge until corrective action has been taken and that pedestrian loads on the bridge be limited, i.e., do not permit large groups to congregate on the bridge.

We have developed four approaches to dealing with the deteriorated condition of the bridge. The approaches include repairing the deficiencies of the bridge to restore its integrity, two different approaches for replacing the bridge, and a "do nothing" option that would leave the bridge in its current condition, but would require ongoing

monitoring of its condition and providing shoring to assure that continuing deterioration, weakening and local failure of elements do not present a life safety hazard.

Each approach is discussed in detail in the report. A summary description and estimate of probable construction cost is included for each approach below. Note that the construction costs include an estimate of professional fee to provide biddable construction documents and include contingencies given the preliminary basis for the estimates.

Alternative 1: Repair the bridge to restore its condition and prolong its useful life by removing and patching deteriorated concrete, filling cracks, applying a new membrane waterproofing coating at the top of the slab, providing protective coatings and migrating corrosion inhibitors at the underside of the deck, wrapping the longitudinal beams with glass fiber to strengthen and protect reinforcement, as well as repairs to the brick parapets.

Estimate of Probable Cost: $194,000.00

Alternative 2a: Replace the bridge with a new prefabricated bridge

Estimate of Probable Cost: $260,670.00

Alternative 2b: Replace the bridge with a new paved roadway on bermed earth fill with MSE retaining walls

Estimate of Probable Cost: $173,000.00

Alternative 3: Perform No Repairs and Monitor/Shore the Bridge Structure

Estimate of Probable Cost: $45,000.00 for initial shoring of beams near pier

Regarding the Patio:

We recommend a number of repairs to correct the major deficiencies of the patio entry area, most critically those which will create a uniform surface without tripping hazards and limit water leakage into the interior of the building. This generally requires rebuilding the slab surface, providing new waterproofing and flashing and restoring the condition of the exterior brick veneer faced wall.

Repairs at the Patio: Estimate of Probable Cost: $91,800.00

INTRODUCTION

Purpose of the Feasibility Study:

The school's concrete pedestrian bridge, providing access to the school's main entry, exhibits numerous signs of deterioration including spalling, cracked and delaminated concrete, and exposed, rusted reinforcement. There is evident ongoing water leakage throughout the bridge and, most notably, at the exterior building wall that supports the south end of the bridge. The school building, including the bridge, was constructed in 1971.

The purpose of this feasibility study is to observe in detail the existing condition of the bridge, to assess its condition and integrity and to recommend appropriate alternatives with estimated costs. It was suspected that there would be chloride contamination of the concrete due to the reported use of ice melting salts on the bridge surface over the years. Sampling and testing of the bridge concrete was completed as part of the study to evaluate its strength and chloride content.

Although not the focus of this investigation, observations of deficiencies of the patio of the main building entry are included.

Structure Description:

BRIDGE: The concrete framed pedestrian bridge spans from a parking area at its north end to a building supported entry slab at the main entrance to the school. The bridge spans from a concrete wall abutment with short wingwalls at the north end to the exterior building wall at the school side with one intermediate vertical pier close to the abutment. The bridge is supported at the building wall by a ledge at the column supported concrete edge beam. It is comprised of a 6-inch deep reinforced concrete deck that spans transversely between longitudinal cast-in-place concrete beams. There is a single drain in the center of the bridge near the pier support. There are tapered brick parapet walls at each side of the bridge with painted steel railings on top of the parapets. The exterior faces of the longitudinal concrete beams are faced with a single wythe of brick masonry vertically supported by a galvanized steel shelf angle bolted to the face of the beam.

The bridge consists of two spans, 10 feet and 31 feet 2 inches to span a total of 41 feet 2 inches. The bridge has a width of 18 feet 11 inches overall and 16 feet 11 inches between the interior faces of the parapets.

ENTRY SLAB: The main entry to the school is approached by an exterior slab constructed over a portion of the roof of the lowest level of the building. It is accessed by the bridge at its north side. The entry slab is enclosed by walls of the building on two sides, by a steel guardrail on its north side and by a brick parapet with painted steel rail at the east side. The patio surface is a non-structural concrete slab placed on a layer of sand fill over the concrete roof slab, beams and columns of the building below. The north edge of the entry slab is over the exterior brick and concrete block wall of the building.

Available References:

The original contract drawings for the high school, including the pedestrian bridge, dated April 1969 were available and formed the basis for the structural calculations that were done as part of this study.

FIELD OBSERVATIONS

Field observations were made initially on July 17, 2012 and in detail on February 22, 2013 by Steere Engineering. Details of our observations are included in Appendix A of this report. The follow is a summary of the most critical observations:

At the Bridge:

- The top surface of the deck shows much exposed aggregate which is the result of loss of the cement matrix at the surface from exposure to weather and ice melting salts. (see Photo 5)
- At the top of the deck, transverse cracking and some rust staining is visible over the pier supported girder. This is apparent flexural cracking in a zone of negative bending of the deck over the girder.
- During hammer testing, the underside of the slab exhibited variations in sound indicating the presence of hollow areas or voids in the concrete. A moderately large void was discovered in one area that was drilled for chloride testing.
- Generalized cracking, spalling, and rust stains were present on the underside of the deck. The majority of cracking appeared to be related to reinforcement corrosion and not to load induced stresses. (see Photo 3)
- Regular transverse cracks were observed at a spacing of about 7.5 inches which matches the spacing of the deck's flexural reinforcement, according to the design drawings.
- Longitudinal cracks exist at the underside of the longitudinal beams, most prominently in the west beam near the girder over the pier. (see Photo 10)
- Diagonal cracking was observed at the east longitudinal beam near the supporting girder over the pier.
- Concrete cover over the shear stirrups of the two longitudinal beams is very low and most of the stirrups are exposed at the interior faces of the longitudinal beams. It was measured in the field to be as minimal as about ¼", which is significantly less than the 1-½" cover that is required both by current practice and by the structural drawings for the bridge's construction. Note also that rust stains are visible at the chairs used to support the beam reinforcement during forming. (see Photos 4 and 7)
- The northeast end of the brick parapet has been damaged from an apparent collision. There are some cracks in bricks and brick joints, and mortar deterioration. We also note, from field observations and review of the design drawings that the bridge parapet is not reinforced and is not adequate for vehicular collision.
- Anchors are missing at the bases of many of the posts of the painted steel guardrail. (see Photo 12)

At the Patio and Exterior Building Wall:

- Concrete slab is uneven, cracked in places and has been patched in areas. The slab is cracked around the bases of the two flag poles, which are assumed to be anchored to the structural concrete deck below.
- On the east side of the bridge, most of the top two courses of brick in the wall face adjacent to the slab are missing. Bricks immediately adjacent to the east bridge beam have settled and rotated because of missing mortar in the joints.
- On the west side of the bridge, the top two courses of brick in the wall face adjacent to the slab have badly deteriorated mortar, have shifted and rotated, and there is vegetation growing from the joints. (see Photo 2)
- Flashing at the base of the wall is damaged and missing in places.

- Most of the mortar joints in the brick face are deteriorated or missing.
- Although much deterioration was visible at the brick veneer face of the wall, we did not observe evidence of structural damage at accessible areas of the interior of the building. The exterior concrete beam that supports the south end of the bridge was partially visible in two locations from the building interior; where visible the condition of the structure appeared good. There was, however, evidence of water leakage at the interior wall finishes.

CONCRETE TESTING

Concrete testing was done by Aires Support Services to evaluate the chloride content of the concrete deck and to verify its compressive strength. Sampling was completed on February 22, 2013 by Aires and consisted of one core sample for concrete compression testing and six chloride samples taken in three different locations from the underside of the bridge deck at depths of 1 inch and 2 inches from the surface of the underside of the deck. Chloride samples were taken at the underside since this is the location of the primary flexural reinforcement for the deck.

The compression test was performed on a sample taken near the center of the bridge, 2-3/4 inches in diameter and 4.41 inches long. The adjusted concrete compression strength was determined by the test to be 3060 psi (pounds per square inch). This is consistent with the structural design drawings which specify a minimum concrete strength of 3000 psi.

Chloride testing measures the acid-soluble chloride ion in a controlled sample as a percentage of the mass of the sample. Chloride ion contents were found to range from 0.093% to 0.206%. These levels are high; a chloride content of approximately 0.03% is typically considered a threshold associated with potential onset of corrosion of reinforcement. Chlorides are likely the result of surface applied ice melting salts so the chloride content is expected to be higher at the top surface.

Appendix B (attached) includes the detailed testing analysis of the concrete samples.

DISCUSSION

Findings:

There are many structural deficiencies of the concrete bridge, including wide spread cracking and spalling of the underside of the 6 inch deep concrete deck and some cracking at the top of the slab. Reinforcing bars are exposed and rusted in many locations, primarily at the underside of the deck slab and the two longitudinal beams. The noted deficiencies are serious structural concerns and will impact the safety of the bridge.

The observed deterioration is the result of a combination of factors including: exposure to weather (rain, snow and freezing temperatures), the cumulative effect of many years of application of ice melting salts to the surface and deficiencies in the way the bridge was originally constructed. Each of these factors has contributed to the observed deterioration of the reinforcing steel that is embedded in the concrete and provides the bridge's flexural strength. Corrosion requires exposure of reinforcing steel to air, moisture and chlorides. Weather and normal use begin the process of deterioration by initiating cracking of the concrete which provides pathways for water and air to the embedded reinforcement. High levels of chlorides in concrete, the result of ice melting salts leaching through the concrete, break down the natural protective character of concrete and significantly lower the threshold at which corrosion will initiate when air and moisture are present. Flexural and shear cracking, as was observed in the top of the slab over the pier and at the longitudinal beams adjacent to the pier, result from applying loads to the bridge and also provide pathways for the elements of corrosion.

Construction deficiencies include the incorrect placement of reinforcing steel in the concrete. Concrete cover at the longitudinal beams (that is, the thickness of concrete over the reinforcing steel) is far too low at as little as ¼". A concrete cover of 1-½ inches was required by the structural drawings for the original bridge construction and is consistent with current good practice to protect concrete that is exposed to weather. Lack of sufficient cover greatly increases the opportunity for the reinforcement to be exposed to moisture, air and chlorides through superficial cracking of the concrete.

Once corrosion has begun, the products of corrosion increase the volume of the reinforcing steel many times, creating very large stresses in the concrete which cause it to spall and crack further. This sets up a cycle of exposure and deterioration which proceeds at an accelerating pace. Moisture in cracks is subject to expansion when it freezes in cold weather and further exacerbates the cycle of deterioration. As time passes, deterioration becomes more extensive and the pace of deterioration accelerates.

Chlorides in the Bridge Concrete:

The presence of chloride ions in concrete is the primary cause of the beginning of corrosion of the steel reinforcing in concrete. Concrete ions are typically introduced to concrete by ice melting salts applied to the surface and migrate through the concrete matrix to the reinforcement where, in the presence of water and air, corrosion begins. A chloride content of 0.020 percent to 0.033 percent is typically considered the threshold at which corrosion of the reinforcement is likely to begin, in the presence of air and moisture. Chloride ion levels in the pedestrian bridge were measured to be significantly higher than this threshold near the bottom of the concrete deck. Since the chlorides migrate from the top of the bridge surface where salt is applied to the bottom, it can be assumed that chloride ion levels throughout the slab are very high.

Once corrosion has been initiated, the rate of corrosion is primarily controlled by the availability of oxygen, moisture, pH and temperature. In the bridge deck and beams, there is significant cracking and leakage which creates an environment that promotes ongoing corrosion of the reinforcement.

Calculations of Bridge Strength:

As part of our study, we did a basic analysis of the bridge structure to check the general adequacy of the main elements: the concrete deck slab and the longitudinal beams. The analysis was based on assumptions of material strength taken from the available original contract drawings, which indicate a concrete strength of 3,000 psi (28-day strength) and reinforcing steel yield strength of 60,000 psi. Note that the strength of concrete was confirmed by testing completed by Aires and discussed above. Our calculations assume that the bridge is in good condition, either as originally constructed or as restored.

We checked the deck slab and the two longitudinal beams for loads from two different conditions.

1. Pedestrian loading: Live loading of 100 psf, as required by the Building Code for exterior pedestrian loadings.
2. Vehicular loading: Although we understand that the bridge is primarily used for pedestrian traffic, its width and location make it accessible to vehicular traffic. We checked the bridge for an HS 15 loading which is representative of many medium trucks and school buses with loads of 6 kips at the front axle and 24 kips at the rear axle.

The conclusion of our calculations is that the bridge, as designed and in good condition, is adequate for use as a pedestrian walkway and can continue to be used, if repaired to restore its strength. The bridge is somewhat overloaded, in good condition, under the load of the HS-15 vehicle and we recommend that vehicles not be permitted on the bridge.

RECOMMENDATIONS

General Discussion:

There are serious deficiencies of the bridge in critical need of repair to restore its structural integrity and prevent further deterioration. While we do not think the bridge is currently unsafe for light use, continued deterioration will reduce its integrity to the point where it will become unsafe. The cycle of deterioration occurs at an accelerating rate and the longer the bridge is left unrepaired, the more extensive and costly repairs will become.

We have considered four alternatives to address the deficiencies of the bridge including repairing the bridge, two different options to replace the bridge, and a "do nothing" option that would leave the bridge in its current condition, but would require ongoing monitoring of its condition and providing shoring to assure that continuing deterioration, weakening and local failure of elements do not present a life safety hazard. Each alternative includes an estimate of probable construction cost, intended to be used for general budgeting purposes and comparison purposes. More accurate pricing will require more detailed design of repairs and specific repair materials and is beyond the scope of this feasibility study. We have included in our costs an estimate of the professional fee associated with each as required to develop biddable construction documents. We have also included a contingency.

Although the condition of the entry slab was not the primary focus of this study, we have included a description of the general repairs required with and budgetary costs of repairs required.

Alternative 1: Repair the Bridge

Successful repair of concrete involves replacement of all deteriorated concrete and steel elements and protection of the repaired bridge structure from the moisture and air necessary for corrosion to progress. This is especially important for concrete that is highly contaminated with chlorides, as is this bridge. The specific tasks of the repairs recommended are:

- Repair of all spalls and deteriorated concrete (sawcut the perimeter, remove deteriorated concrete, clean exposed reinforcement, coat reinforcement and exposed concrete surfaces, apply bonding agent, apply specialized repair mortar that will be compatible with the condition of the concrete, galvanic anodes, where spall size warrants). Most areas of spalls are at the underside of the deck and beams, although there is also some spalling at the top of the slab.
- Repair cracks by filling with a structural repair material at the underside of the deck slab, at the longitudinal beams (injected crack repair) and at the top of the deck slab (gravity feed repair).
- Protect the sides of the longitudinal beams, after repairing the spalls and exposed rebar, because of the lack of adequate cover. For this estimate, we have considered wrapping the sides and bottoms of the beams with glass fiber reinforcement which will both increase the shear strength of the beams and protect them from weather. This will require removal and replacement of the exterior brick facing of the two beams and of the shelf angle, bolted to the side of the beam that supports the brick face.
- Spray apply a migrating corrosion inhibitor to the underside of the deck to penetrate the concrete and protect the bottom reinforcement because of the high levels of chlorides.
- Provide a traffic bearing membrane coating at the top of the slab to waterproof and protect the concrete from exposure to moisture. We have based our cost on the use of an epoxy broadcast system (Sika 22 LoMod with a top coat was assumed for pricing).

- Provide protection for the exposed faces of the longitudinal beams that lack significant cover. We have based our cost estimate on the use of bonded glass fiber wraps that will provide protection for the reinforcement and provide additional shear strength for the beams.
- Repair the damaged brick parapet at the northeast end of the bridge.
- The bridge rail is not compliant with current building code requirements and should be replaced with a compliant rail.

Discussion: Repairs to the bridge will maintain the current appearance and function of the entry to the school and will extend the useful life of the bridge. However, because of the condition of the bridge, primarily the thin deck material, chloride contamination and lack of concrete cover, repairs will not last indefinitely. The life of the repaired bridge will depend on the use of appropriate repair methods, careful installation, and good maintenance practices. Even with the best quality repairs and diligent maintenance, the high level of chloride contamination of the concrete leaves the deck vulnerable to future corrosion.

Estimate of Probable Cost, Alt 1: $194,000.00 including 25% contingency

Alternative 2: Replace the Bridge

For budgeting purposes, we considered the option of demolishing the existing deteriorated bridge and replacing it with a new bridge structure. Many options for replacement are possible; we looked at two options that we are both cost effective and aesthetically compatible with the architecture of the school building. The first option discussed is replacement with a prefabricated bridge structure and the second is to create a soil berm on which a paved roadway can be constructed.

Alternative 2a: New Prefabricated Bridge

There is a wide range of standard and custom designs that can be considered for a new prefabricated bridge structure. We have based our cost estimate on a prefabricated, steel arch bridge with timber deck surface, produced by Contech Engineered Solution. Prefabricated bridge structures are substantially fabricated in a shop, thus providing good quality control, then shipped to the site and installed on supporting foundations. Details of the bridge we assume for our estimated are provided in the appendices to this report. The bridge we chose to consider is economical and we feel is compatible with the building. Bridges of other configurations, widths and with other features can be considered, typically at greater cost. We have included project sheets that illustrate bridges similar to that considered for our estimate.

We have considered a bridge that is narrower than the current bridge at 14 feet wide, since this width will generously accommodate pedestrian traffic and will provide enough width for an occasional vehicle crossing. Since the concrete abutment wall and wingwalls at the north end of the bridge are in good condition and substantial, we have assumed that the north end of the new bridge can be supported from the existing abutment, with some modifications to the top of the abutment wall to accept the bearings for the new bridge. We have also assumed that new piers and footings will be required to support the new bridge at the face of the building. It is important that the bridge and the building be able to move independently from each other since they are exposed to very different weather conditions. The current bridge is supported from the building structure with a moving joint that was designed to allow such differential movement; such details frequently do not perform well over time and risk causing potential damage to the building structure. We consider it prudent to provide a new, independent structure.

The bridge structure considered is Contech's "Capstone" bridge, which consists of weathering steel trusses each side of the span supporting a timber deck on steel deck framing. This is a bridge that will fit the architecture of the school building and will be durable with low maintenance requirements. The manufacturer provides a warranty of 25 years for the bridge superstructure, although it can be expected to have a significantly longer useful life. The timber decking will need to be replaced over the life of the bridge; a typically expected life is about 15 years, depending on use and exposure. The steel bridge structure itself is constructed of weathering steel, which is intended to develop an aesthetically pleasing, light coating of rust that protects the bridge for many years with little maintenance required. At the High School, the weathered brown color that will develop will blend well with the brick facade of the building. Photos of two installations of similar bridges are included in the appendix.

Estimate of Probable Cost, Alt 2a: $260,700.00, including a 15% contingency and engineering fees to develop biddable construction documents.

Alternative 2b: New Paved Roadway on Bermed Earth Fill with Retaining Walls

This provides an alternate scheme to access the main school entry for lower cost than providing a new bridge and generally would consist of filling the existing "moat" and constructing a soil supported paved roadway. It is not, however, possible to fill the entire space under the roadway, since the south end of the bridge abuts an exterior wall of the building. This wall has not been designed with the strength required to support soil backfill nor is it waterproofed adequately for that exposure. Additionally, there are two large louvers that provide intake air to the building that cannot be blocked.

Because of the adjacent exterior building wall, we have proposed a scheme that will provide a retaining wall approximately 8 feet +/- to the north of the building and parallel to the building wall to support the backfill. The retaining wall is an MSE (mechanically stabilized earth) wall which can be faced with anchored masonry to provide a durable wall with an attractive appearance. The 8 foot gap between the MSE wall and the building wall will be spanned by a precast plank bridge deck with railings bearing on the MSE wall to its north and the existing bridge seat at the building to its south. Some modification will be required at the existing bridge seat but, because the supported span is short, the loads transferred to the bridge seat will be lower than those currently supported, so we assume it will be feasible to safely support the span. Note that attention will need to be paid to developing a bearing detail that will allow the precast plank and the building wall to move independently, but because loads are light, the span is short and the bridge bearing is similar to the existing deck bridge bearing, it should be feasible to accomplish.

Since the proposed backfill will cover an existing catch basin at the base of the current bridge, we have proposed extending the manhole up to the top of the new fill with a new concrete riser structure. This will allow the catch basin to perform as it currently does without requiring the expense and complexity of rerouting drainage from the building.

We have assumed that the soil backfill which is faced on the south by the MSE wall will taper down at a 2:1 slope to the east and west and will be covered with loam and seeded. We have assumed a bituminous pavement surface with guardrails at each side of the 8 foot precast deck span and at the top of the wall along the sloped sides.

Estimate of Probable Cost, Alt. 2b: $173,000.00, including a 20% contingency and engineering fees to develop biddable construction documents.

Alternative 3: Perform No Repairs and Monitor/Shore the Bridge Structure

Depending on long term planning and budgetary goals, the school may want to consider the option of effectively doing nothing to permanently restore the bridge, but monitoring its condition and providing shoring to assure that ongoing deterioration, weakening and local failure of elements do not present a life safety hazard. It is important to note that once deterioration begins, it will progress at a rapidly accelerating rate. Although the bridge appears to be currently safe for pedestrian loads, it has clearly deteriorated and it is not possible to accurately predict the point at which it will no longer be safe and failure imminent.

Shoring could be provided by timber cribbing, as is (more commonly than one would wish) used to shore at risk highway bridges. Such shoring needs to be designed carefully by a structural engineer to assure that it will adequately support failing elements.

Based on our observations, the most concerning condition is the shear cracking at the west longitudinal beam adjacent to the pier. We would recommend, as a minimum, that shoring be provided under the two longitudinal beams near the pier.

Estimate of Probable Cost, Alt 3: $45,000.00 to provide shoring under beams at the pier.

Recommended Repairs to the Patio:

The recommended repairs to the patio have two primary goals: to provide an even walking surface that does not present tripping hazards and to limit water leakage into the interior of the building. The recommended repairs include:

- Removing the entire concrete topping slab, including the layer of insulating fill over the concrete building roof structure.
- Providing new membrane waterproofing over the top of the concrete roof structure, after cleaning by sandblasting or other appropriate methods to remove the original waterproofing. Flashing at the perimeter of the patio slab where it abuts the upper building walls should be upgraded.
- Providing new drainable fill layer over the membrane, with downspouts at the exterior wall to drain runoff away from the face of the building.
- New concrete slab (or pavers) sloped to drain away from the building.
- Provide a new joint cover over the joint to the bridge. Currently, water is draining directly through the joint, under the bridge seat and down the face of the building. During our field inspection in February, there were large icicles hanging from the bridge seat at the face of the wall.
- Rebuild the damaged and deteriorated cap at the exterior edges of the slab.
- Damaged portions of the brick veneer wall face should be replaced. Examples are the cracked areas at the sides of the bridge bearings.
- The damaged flashing at the base of the brick veneer should be replaced.
- The entire exterior face of the brick veneer wall should be repointed.

- The railings at the exterior edges of the patio should be replaced with new, code compliant rails.

Estimate of Probable Cost, Entry Patio: $91,800.00, including a 25% contingency and engineering fees to develop biddable construction documents.

Further Work:
The presented options will provide the Middleborough Schools with background to be able make informed decisions about the bridge and entry in the light of its long-term goals for the high school.

Fully developed construction documents for needed repairs, for either of the replacement options or for the shoring option must be developed by a design professional to produce biddable contract documents. If the choice is made to pursue repairs, detailed repair methods and materials should be evaluated and specified considering optimization of costs and the long term performance of repairs. If replacement is chosen as an option, the design professional can explore a wider range of options for a new bridge than have been considered here.

Appendix A

Detailed Field Observations

Steere ENGINEERING INC
Bridge and Structural Engineers

Field Observation Report

Date of Report: February 22, 2013

Project:	Middleborough High School Bridge Repairs Assessment
Client:	Middleborough Public Schools
Date of Site Visit:	February 22, 2013
Time of Visit:	9:45 am – 1:30 pm
Report By:	Rachele Herrington
In Attendance:	Susan Payne Bacher, Steere Engineering Two (2) staff members from Aires Testing

R. Herrington and S. Bacher arrived at Middleborough High School at 9:45 am to make observations of the pedestrian bridge and patio outside of the main entrance of the school. Staff from Aires Testing were on the site from 10:30am-11:30am to take concrete core samples.

The following observations were made:

1. The day was sunny, breezy with temperature in the lower 30's.
2. Measurements were taken to verify the dimensions of the bridge structure and patio.
3. Staff from Aires Testing took concrete cores to be tested for strength and chloride content.
    a. A three-inch core sample was taken from the top of the slab near its south bearing. Coring was stopped short of the bottom, since a rebar was encountered and the extracted core was about 5". The slab is monolithic with no separate topping as initially expected.
    b. Three (3) concrete samples from the underside of the deck to test for chloride content.

BRIDGE (underside):

4. Most beam stirrups were visible at the exposed interior faces of both north-south beams (exterior faces are clad by brick). Concrete around the stirrups is cracked, spalled and rusted. Original concrete cover appeared to be as little as 1/4" in places; in all locations where the stirrups are visible, the concrete is significantly less than required by the original design documents and good practice.
5. A horizontal crack approximately 36" long was observed on the bottom of the east beam. Several diagonal cracks, evenly spaced, were evident on the west beam (near the column location). The end of the west beam (near the backwall) has a section of concrete that has fallen off.
6. Several areas of cracking and spalling were observed on the top of and underside of the deck slab.
7. Several transverse cracks were observed on the underside of the deck. Concrete delamination was noted along many of the cracks. These cracks are at the locations of the transverse bottom deck reinforcement and typically extend across most of the width of the deck. Heavy rust staining is evident at several locations on the underside of the deck.
8. A 3'6" long spall with exposed rebar was noted about 8" south of the bridge column, approximately centered on the column parallel to the deck bottom transverse rebar.
9. There is some cracking observed on the underside of the deck, perpendicular to the span of the deck (cracking runs generally north-south) just south of the column near the drain pipe. This may be flexural cracking. There is no visible staining.
10. It was noted that the underside of the deck is not flat: there are broad areas that are convex or concave. This may have been present from forming.

11. Several regularly spaced diagonal cracks were observed in the vertical face of the interior face of the west beam to the south of the beam over the column. Cracks are at 45 degree angle moving away from the support going from bottom to top of beam.
12. The exposed end of the beams at their south supports (building end) appeared to be constructed per the original contract drawings, for as much was visible.
13. It appears that the concrete slab has hollow areas that are exposed from the spalls. The core taken on the underside of the deck seems to open up to a hollow area in the slab, about one inch from the bottom of the slab.

BRIDGE (topside):

14. There is damage to the east parapet on the north side of the bridge. This area has been roped off with caution tape, but no repairs have been performed.
15. Three (3) light fixtures on the bridge are broken and/or in the incorrect location.
16. There is a course of bricks about mid-height on the outside of the west parapet where the mortar has noticeably deteriorated.
17. A single drain is present at the center of the deck, about 19 feet from the north edge (roadway side) of the bridge.
18. There is a transverse crack running most of the width of the bridge (east-west direction) at about 2'-6" from the north edge of the bridge.
19. There are transverse cracks in the east-west direction over the column location. This appears to be flexural crack due to negative bending over column.
20. There are rust spots in three locations over the supporting column.
21. There is a pit in the surface of the deck, about 2"x3" by about 1" deep near the northwest corner.

PATIO:

22. The patio has several areas of patching, most of which are located at the joint between the patio and the bridge.
23. The flagpoles have cracks propagating out from their attachment into the concrete slab. No base plate on either flagpole was observed.
24. Spalling is evident at the joint locations on the top slab. Some rust staining was evident, but no exposed rebar was observed in the top of the slab.
25. A few locations have missing bricks on the top course of brick veneer. One location on the northeast wall had missing bricks on the top two courses.

HANDRAILS:

26. Handrails are painted steel with two horizontal rails and vertical rails at 4 feet on center. Rails do not conform with current code requirements.
27. The handrail is loose at several locations along the patio. Around the entry patio, the posts are anchored in metal sleeves set between the bricks in the upper course of the wall. Bricks adjacent to the post sleeves are missing at two posts on the east side of the patio and at one post on the west side of the patio.
28. At the east parapet of the patio, the railing is mounted on top of the brick parapet.
29. At the bridge, rail posts are attached to through base plates bolted to the top of the bridge deck concrete. Many of the anchor bolts are missing (roughly 50%), on both sides of the bridge. The remaining bolts are heavily rusted.

MAIN BUILDING/LOWER LEVEL:

30. Due to the heavy buildup of icicles on the outside of the brick veneer, R. Herrington and S. Bacher requested access to the inside of the building for signs of water leakage. With assistance from the custodial staff, we gained access to the kitchen and a classroom adjacent to the bridge at the lowest level of the building. The staff provided a ladder and removed a few ceiling tiles for access. The following was observed:
    a. The concrete edge beam that supports the bridge was partially visible in two locations. Where visible, it appeared to be in good condition with only a small rust stain and very little evidence of water.
    b. There is some staining at the edge of the ceiling along the outer wall adjacent to the bridge that appears to be leakage.
    c. At the interior face of the exterior masonry wall in the kitchen, there is some bubbling and sagging of paint, apparently from water.
    d. Under the west end of the patio, there is a drainage pipe that had been installed from the patio level to the exterior wall, reportedly because of previous leakage likely from the concrete cracks that have propagated from the flagpole connections in the patio slab.
    e. One spalled area with exposed concrete was observed on underside of the patio when the ceiling tiles were lifted to check for water damage. This area is located on the east wall of the basement and most likely corresponds with a patched area in the southeast corner of the patio.
31. There is significant leakage from the horizontal joint under the edge of bridge slab adjacent to the building wall and under the ends of the beams. Water appears to be leaking from the patio, through the vertical joint between the bridge slab and the building slab, over the wall flashing. Leakage was evident because of the icicles and frozen streams of water down the wall face.
32. On the east side of the bridge, most of the top two courses of brick in the wall face adjacent to the slab are missing. Bricks immediately adjacent to the east bridge beam have settled and rotated because of missing mortar in the joints.
33. On the west side of the bridge, the top two courses of brick in the wall face adjacent to the slab have badly deteriorated mortar, have shifted and rotated and there is vegetation growing from the joints.
34. Weep holes in the wall appear to be working: there is ice extending from the weep holes.
35. Flashing at the base of the wall is damaged and missing in places.
36. Most of the mortar joints in the brick face are deteriorated or missing.
37. The face of brick veneer is stained with significant efflorescence.

Appendix B

Photos

Photo 1: Elevation of Bridge looking Northwest

Photo 2: Elevation of Bridge looking Southeast

Photo 3: Underside of Bridge with Corroded Rebar

Photo 4: Underside of Bridge with Corroded Stirrups Lacking Cover

Photo 5: Rust Staining with Cracking near the North End of the Bridge

Photo 6: Horizontal Leg of Shelf Angle under Brick Veneer at Exterior Face of Beam
Note longitudinal crack in bottom of beam.

Photo 7: Typical Rust Staining and Rusted Exposed Rebar with Spalling Along East Beam

Photo 8: Rust Staining (no exposed rebar) at Column Cap

Photo 9: Heavy Rust Stains at Underside of Deck near the Column, on the Concrete Abutment Side

Photo 10: Underside of the West Beam, near Column Location

Photo 11: Damaged Brick Parapet at Northwest Corner of Bridge

Photo 12: Unanchored Vertical from Rail Post at Bridge

Photo 13: Overview of Patio Slab

Photo 14: Patched Concrete Slab at Top of Patio

Photo 15: Exterior Building Wall under Bridge Bearing Adjacent to Patio

Photo 16: Top of Exterior Wall at Patio West of Bridge Shoring Deterioration of Wall Cap, Missing Bricks, Rotated Bricks, Loss of Mortar and Leakage

Photo 17: Exterior Wall at Patio Edge, East of Bridge

Photo 18: Bottom of Exterior Wall at Patio Edge Showing Deteriorated Flashing

Appendix C

Concrete Test Results

Steere ENGINEERING INC
Bridge and Structural Engineers

ARIES
SUPPORT SERVICES INC.

876 East Road
Tiverton, Rhode Island 02878

401-625-9879
Fax 401-625-5319

Project: Middleborough High School Pedestrian Bridge
Date Sampled: February 22, 2013
Aries Project No. 51304

TEST LOCATIONS

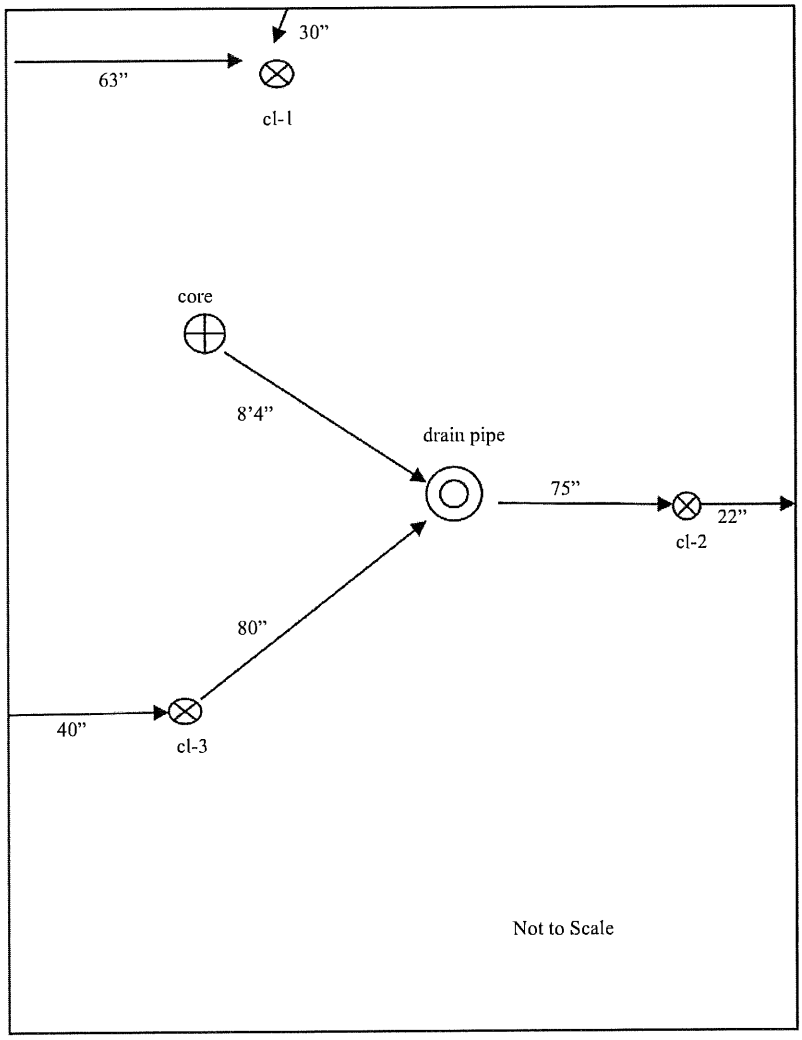

Chloride Ion Contents

Sample	Depth, (In)	Acid-Soluble Chloride, % by mass of sample
Cl-1	1	0.206
	2	0.197
Cl-2	1	0.093
	2	0.126
Cl-3	1	0.116
	2	0.163

*All chloride samples drilled and measured from the outside surface of the of concrete slab.

ARIES SUPPORT SERVICES INC.

876 East Road
Tiverton, RI 02878
401-625-9879
Fax 401-625-5319

REPORT OF CONCRETE CORES COMPRESSIVE STRENGTH TEST
ASTM C42-04

Client: Middleborough Public Schools
30 Forest Stteet
Middleborough, MA 02346

Project Name: High School
Middleborough, MA

Dates Sampled: 02/22/13

Source of Cores: Pedestrian Bridge

Date Tested: 03/05/13

CORE NO.	C-1								
DIAMETER (in)	2.75								
LENGTH CAPPED (in)	4.41								
AREA (in^2)	5.94								
MAXIMUM LOAD (lbs)	18750								
STRENGTH (psi)	3,160								
LENGTH/DIAMETER	1.60								
CORRECTION FACTOR	0.97								
STRENGTH (psi) ADJ. FOR L/D<2	**3,060**								
DEFECTS IN THE CORE	NO								
SOURCE	Bridge Deck								
MAXIMUM SIZE OF AGGREGATE (in)	3/4								
TYPE OF FRACTURE	2								

Type of fracture: ASTM C39-05

1) Cone 2) Cone & Vertical 3) Columnar 4) Diagonal 5) Side (Top/Bottom) 6) Side (Pointed)

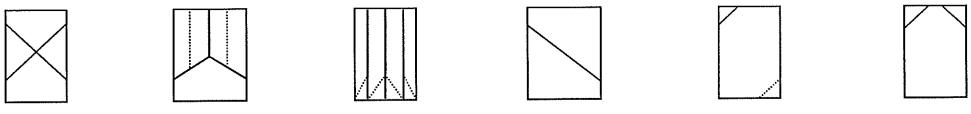

NOTES:

Tested by: GB

Approved by: PMO

Appendix D

Structural Calculations

Steere ENGINEERING INC
Bridge and Structural Engineers

Middleborough High School Pedestrian Bridge

Originator:	A. Stuer	Checker:	S. Payne Bacher
Date:	March 29, 2013	Date:	March 29, 2013

Calculation Objective:

Determine the adequacy of the existing bridge deck slab and longitudinal beams for the live loads required.

Design Codes/References:

- Massachusetts State Building Code, 8th Edition
- ASCE 7-05/IBC 2009
- ACI 318-08

Assumptions:

Design values from existing plans:

- Slab positive moment reinforcing is #6 at 7.5" o.c.
- Slab negative moment reinforcing is #6 at 15" o.c.
- Beam positive moment reinforcing is 4 - #11 bars
- Beam negative moment reinforcing is 3 - #9 bars
- Yield Strength Steel: 60 ksi
- Compressive Strength Concrete: 3ksi, from the existing plans
- Live Loading: 100 psf pedestrian or HS-15 truck

Calculations are done assuming that the bridge slab and longitudinal beams are in good condition.

Verifications: Date verified: 3/5/13

- Concrete compressive strength are confirmed by testing to be 3 ksi or greater.

Methods:

- Concrete strengths were developed in accordance with ACI 318-08.

Calculation Conclusions:

Note that these conclusions are valid for the bridge slab and longitudinal beams when in good condition, that is, as designed or after all restorative repairs have been made.

- The slab is adequate for the required dead and pedestrian live loading.
- The slab is somewhat overstressed for the dead and HS-15 truck loading.

Concrete Capacity Calculations

Purpose/Objective/Methods:

1. To calculate the capacity of the Middleborough High School Pedestrian Bridge (slab and beams).

References:

1. ASCE 7-05
2. ACI 318-08
3. AISC Manual for Steel Construction 13th Edition

Slab Positive Moment Capacity

$A_s := 0.7in^2$ Using 1 foot strip - #6 at 7.5" o.c.

$F_y := 60ksi$ from contract drawings

$f_{c.prime} := 3ksi$

$b := 12in$ 1 foot strip

$$a := \frac{A_s \cdot F_y}{0.85 \cdot f_{c.prime} \cdot b} = 1.37 \cdot in$$

$d := 4.5in$ depth to steel reinforcing

$\phi_f := 0.9$

$$M_{cap} := \phi_f \cdot A_s \cdot F_y \cdot \left(d - \frac{a}{2}\right) = 12.01 \cdot ft \cdot kip$$

Slab Positive Moment - DL+100psf LL

$d_{slab} := 6in$ $LL := 100psf$

$\gamma_{conc} := 150pcf$

$$DL := d_{slab} \cdot \gamma_{conc} = 75.00 \cdot psf$$

$$w_u := (1.2 \cdot DL + 1.6 \cdot LL) \cdot b = 250.00\, ft \cdot psf$$

$L_{slab} := 17.5ft$ center to center span of slab

$$M_u := \frac{w_u \cdot L_{slab}^2}{8} = 9.57 \cdot ft \cdot kip$$ Conservatively assuming the slab behaves as if it is simply supported

$chk_{mom} := if(M_u > M_{cap}, "NG", "OK") = "OK"$

Slab Positive Moment - DL+Truck LL

$$S := \frac{L_{slab}}{ft} = 17.50$$ $Load_{wheel} := 12 \cdot kip$ $wh_{space} := 6ft$

$$Width := (26.0 + 6.6 \cdot S) \cdot in = 11.79\, ft$$ Strip Width AASHTO Table 4.6.2.1.3-1

$$Load_{1foot} := \frac{Load_{wheel}}{Width} \cdot b = 1.02 \cdot kip$$

$$M_{u.truck.slab.pos} := \frac{Load_{1foot}}{2 \cdot L_{slab}} \cdot \left(L_{slab} - \frac{wh_{space}}{2}\right)^2 = 6.11 \cdot ft \cdot kip$$ AISC Table 3-23 case 44

$$M_u := 1.2 \cdot \frac{DL \cdot L_{slab}^2}{8} \cdot b + 1.6 M_{u.truck.slab.pos} = 13.23 \cdot ft \cdot kip$$

$$\frac{M_u}{M_{cap}} = 1.10$$

$$chk_{mom} := if(M_u > M_{cap}, "NG", "OK") = "NG"$$

Slab Shear DL + Truck LL

$$V_u := 1.2 \cdot \frac{DL \cdot L_{slab}}{2} \cdot b + 1.6 \cdot Load_{1foot} = 2.42 \cdot kip$$

$$\beta := 2.0 \qquad \phi_v := 0.9$$

$$V_c := 0.0316 \cdot \beta \cdot \sqrt{\frac{f_{c.prime}}{ksi}} \cdot b \cdot d_{slab} \cdot ksi = 7.88 \cdot kip$$ AASHTO Equation 5.8.3.3-3

$$V_{cap} := \phi_v \cdot V_c = 7.09 \cdot kip$$

$$chk_{shr} := if(V_u > V_{cap}, "NG", "OK") = "OK"$$

Beam Information and Load Development

$$d_{bot} := 1ft + \left(6 + \frac{5}{8}\right) \cdot in - 1.5in - \frac{1.41in}{2} = 1.37\,ft$$

$$d_{top} := 1ft + \left(6 + \frac{5}{8}\right) \cdot in - 1.5in - \frac{1.125in}{2} = 1.38\,ft$$

$$L_{beam} := 30.5ft$$

$A_{s.bot} := 6.24in^2$ 4 #11 bars bottom $A_{s.top} := 3in^2$ 3 #9 bars top in negative moment zone

$$A_{brick.wall} := 2.5ft \cdot \left[\frac{\left(7 + \frac{5}{8}\right)in + (1ft + 3.5in)}{2}\right] + 1.55ft \cdot 0.33ft = 2.92 \cdot ft^2$$ Area of brick wall

$$\gamma_{brick} := 120pcf$$

$$w_{brick} := A_{brick.wall} \cdot \gamma_{brick} = 350.44 \cdot plf$$ weight of brick wall on beam

$$A_{beam} := 1.552ft \cdot 1.33ft = 2.06 \cdot ft^2$$

$$w_{beam} := A_{beam} \cdot \gamma_{conc} = 309.62 \cdot plf$$ self weight of beam

$$w_{trib} := 8.08ft$$ tributary width of slab on exterior beam

$$w_{trib.slab} := w_{trib} \cdot d_{slab} \cdot \gamma_{conc} = 606.00 \cdot plf$$ weight of slab

$$DL_{beam} := w_{trib.slab} + w_{beam} + w_{brick} = 1266.07 \cdot plf$$

$LL_{beam} := LL \cdot w_{trib} = 808.00 \cdot plf$

$w_{u.beam} := 1.2 \cdot DL_{beam} + 1.6 \cdot LL_{beam} = 2812.08 \cdot plf$

Beam Positive Moment Capacity

Since the negative beam reinforcement is insufficient to create a fixed support assume the beam acts as simply supported between the wall support and girder.

$b := 16in$

$$a := \frac{A_{s.bot} \cdot F_y}{0.85 \cdot f_{c.prime} \cdot b} = 9.18 \cdot in$$

$\phi_f := 0.9$

$$M_{cap} := \phi_f \cdot A_{s.bot} \cdot F_y \cdot \left(d_{bot} - \frac{a}{2}\right) = 332.24 \cdot ft \cdot kip$$

Beam Positive Moment DL + 100psf LL

$$M_u := \frac{w_{u.beam} \cdot L_{beam}^2}{8} = 326.99 \cdot ft \cdot kip \qquad \frac{M_u}{M_{cap}} = 0.98$$

$chk_{mom} := if(M_u > M_{cap}, "NG", "OK") = "OK"$

Beam Positive Moment DL + Truck LL

$$DF_{axle} := 0.5 \cdot \frac{[L_{slab} - (2ft + 3in)]}{L_{slab}} + 0.5 \cdot \frac{[L_{slab} - (2ft + 3in + 6ft)]}{L_{slab}} = 0.70$$

$a := 14ft$

$P_1 := 6kip \cdot DF_{axle} = 4.20 \cdot kip$

$P_2 := 24kip \cdot DF_{axle} = 16.80 \cdot kip$

$$x := 0.5 \cdot \left(L_{beam} - \frac{P_2 \cdot a}{P_1 + P_2}\right) = 9.65\ ft$$

AISC Table 3-23 Case 45

$$M_{u.1} := (P_1 + P_2) \cdot \frac{x^2}{L_{beam}} = 64.12 \cdot ft \cdot kip$$

$$M_u := 1.2 \cdot \frac{DL_{beam} \cdot L_{beam}^2}{8} + 1.6 M_{u.1} = 279.25 \cdot ft \cdot kip$$

$chk_{mom} := if(M_u > M_{cap}, "NG", "OK") = "OK"$

$$\frac{M_u}{M_{cap}} = 0.84$$

Appendix E

Alternative 2a – Supporting Documents

Bridge Replacement with New Prefabricated Bridge

Steere ENGINEERING INC
Bridge and Structural Engineers

BRIDGE SUMMARY

Capstone Pedestrian Bridge 40' Span x 12' Width

Deck Type: IPE (Hardwood)

Bridge Finish: Weathering Steel

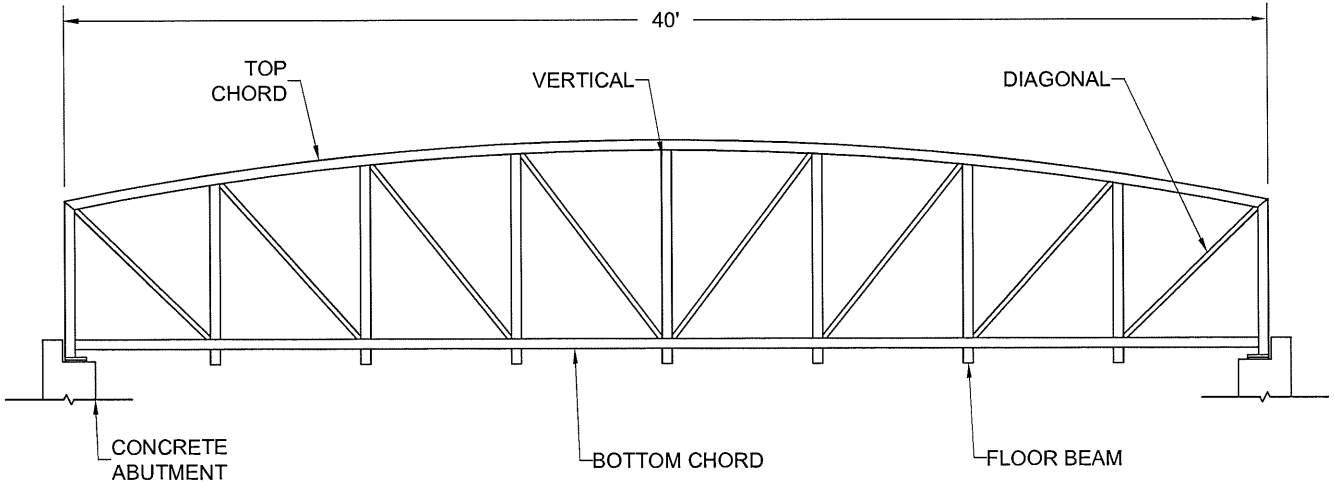

BRIDGE ELEVATION

The graphic information and details contained in these plans is schematic in nature. The plans, elevations and sections have been developed automatically in a way that demonstrates your current input in a relative and proportional manner. The details included in these plans have been selected to represent commonly built construction assemblies. These are not Engineering drawings, and as such, the details may vary in the final design for your project depending on many variables that are selected in your final scope of work and specifications.

PRELIMINARY
NOT FOR CONSTRUCTION

The design and information shown on this drawing is provided as a service to the project owner, engineer and contractor by Contech Engineered Solutions LLC ("Contech"). Neither this drawing, nor any part thereof, may be used, reproduced or modified in any manner without the prior written consent of Contech. Failure to comply is done at the user's own risk and Contech expressly disclaims any liability or responsibility for such use.

If discrepancies between the supplied information upon which the drawing is based and actual field conditions are encountered as site work progresses, these discrepancies must be reported to Contech immediately for re-evaluation of the design. Contech accepts no liability for designs based on missing, incomplete or inaccurate information supplied by others.

MARK	DATE	REVISION DESCRIPTION	BY

CONTECH®
ENGINEERED SOLUTIONS LLC
www.contechES.com
9025 Centre Pointe Dr., Suite 400, West Chester, OH 45069
800-338-1122 513-645-7000 513-645-7993 FAX

CONTINENTAL BRIDGE

CONTECH
DYOB®
DRAWING

Capstone® 40' Span x 12' Width
HIGH SCHOOL PEDESTRIAN BRIDGE 480610
Pedestrian Bridge
MIDDLEBOROUGH, Massachusetts

PROJECT NUMBER: 138078	DATE: 3/25/2013
DESIGNED: DYOB	DRAWN: DYOB
CHECKED:	APPROVED:
SHEET NO.: 1 OF 4	

I:\COMMON\ENGINEERING\DYOB\DYOB\138078\BRIDGE138078.DWG 3/25/2013 9:33 AM

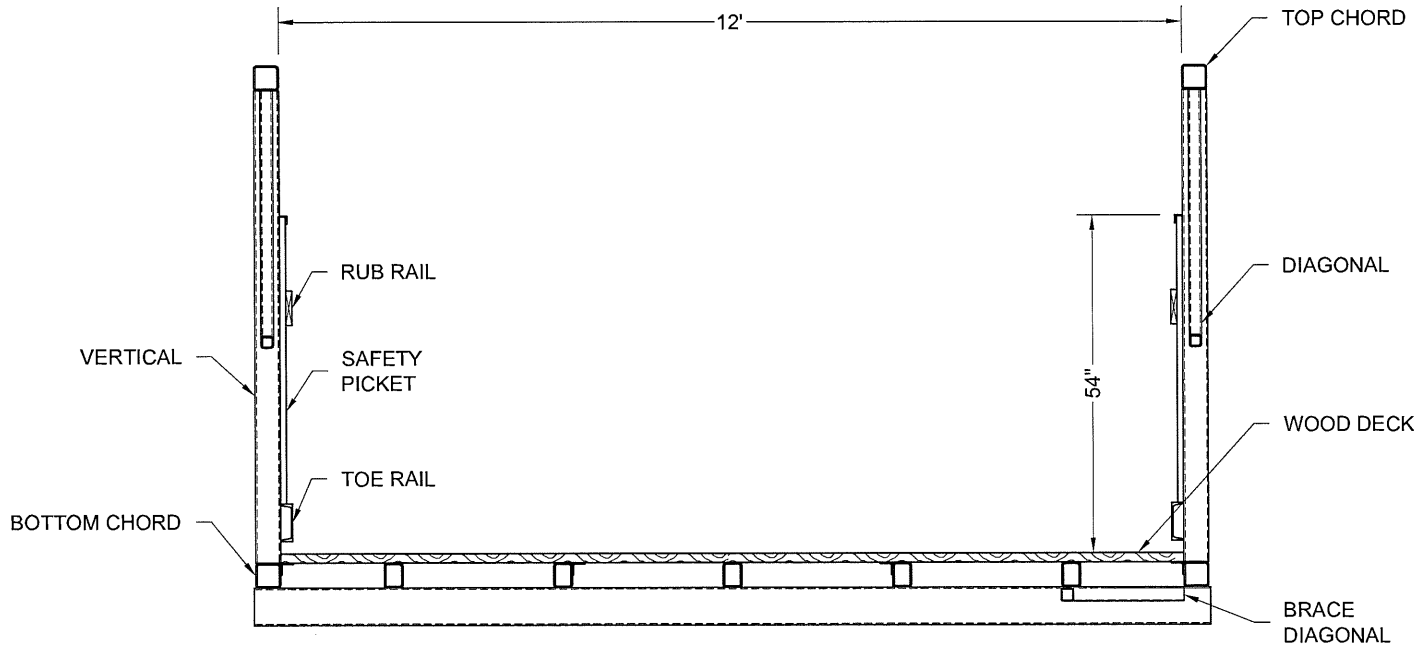

SECTION

The graphic information and details contained in these plans is schematic in nature. The plans, elevations and sections have been developed automatically in a way that demonstrates your current input in a relative and proportional manner. The details included in these plans have been selected to represent commonly built construction assemblies. These are not Engineering drawings, and as such, the details may vary in the final design for your project depending on many variables that are selected in your final scope of work and specifications.

PRELIMINARY
NOT FOR CONSTRUCTION

The design and information shown on this drawing is provided as a service to the project owner, engineer and contractor by Contech Engineered Solutions LLC ("Contech"). Neither this drawing, nor any part thereof, may be used, reproduced or modified in any manner without the prior written consent of Contech. Failure to comply is done at the user's own risk and Contech expressly disclaims any liability or responsibility for such use.

If discrepancies between the supplied information upon which the drawing is based and actual field conditions are encountered as site work progresses, these discrepancies must be reported to Contech immediately for re-evaluation of the design. Contech accepts no liability for designs based on missing, incomplete or inaccurate information supplied by others.

MARK	DATE	REVISION DESCRIPTION	BY

CONTECH®
ENGINEERED SOLUTIONS LLC
www.contechES.com
9025 Centre Pointe Dr., Suite 400, West Chester, OH 45069
800-338-1122 513-645-7000 513-645-7993 FAX

CONTINENTAL BRIDGE

CONTECH
DYOB®
DRAWING

Capstone® 40' Span x 12' Width
HIGH SCHOOL PEDESTRIAN BRIDGE 480610
Pedestrian Bridge
MIDDLEBOROUGH, Massachusetts

PROJECT NUMBER: 138078	DATE: 3/25/2013
DESIGNED: DYOB	DRAWN: DYOB
CHECKED:	APPROVED:
SHEET NO.: 3 OF 4	

I:\COMMON\ENGINEERING\DYOB\DYOB\138078\BRIDGE138078.DWG 3/25/2013 9:31 AM

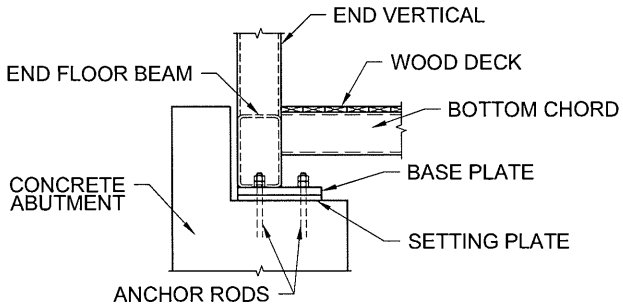

BEARING SIDE VIEW

INFORMATION PROVIDED FOR REPRESENTATION ONLY.
ACTUAL BEARING DIAGRAMS TO BE BASED ON FINAL DESIGN.

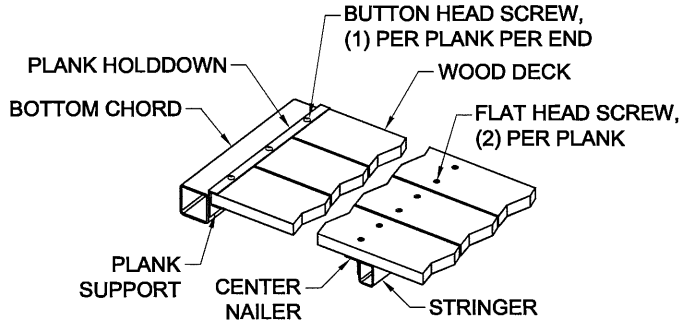

WOOD DECK DETAIL

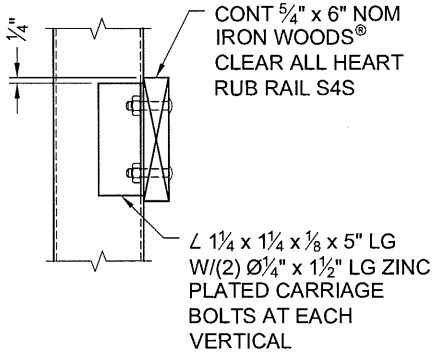

RUB RAIL DETAIL

The graphic information and details contained in these plans is schematic in nature. The plans, elevations and sections have been developed automatically in a way that demonstrates your current input in a relative and proportional manner. The details included in these plans have been selected to represent commonly built construction assemblies. These are not Engineering drawings, and as such, the details may vary in the final design for your project depending on many variables that are selected in your final scope of work and specifications.

PRELIMINARY
NOT FOR CONSTRUCTION

The design and information shown on this drawing is provided as a service to the project owner, engineer and contractor by Contech Engineered Solutions LLC ("Contech"). Neither this drawing, nor any part thereof, may be used, reproduced or modified in any manner without the prior written consent of Contech. Failure to comply is done at the user's own risk and Contech expressly disclaims any liability or responsibility for such use.

If discrepancies between the supplied information upon which the drawing is based and actual field conditions are encountered as site work progresses, these discrepancies must be reported to Contech immediately for re-evaluation of the design. Contech accepts no liability for designs based on missing, incomplete or inaccurate information supplied by others.

MARK	DATE	REVISION DESCRIPTION	BY

CONTECH® ENGINEERED SOLUTIONS LLC
www.contechES.com
9025 Centre Pointe Dr., Suite 400, West Chester, OH 45069
800-338-1122 513-645-7000 513-645-7993 FAX

CONTINENTAL BRIDGE

CONTECH DYOB® DRAWING

Capstone® 40' Span x 12' Width
HIGH SCHOOL PEDESTRIAN BRIDGE 480610
Pedestrian Bridge
MIDDLEBOROUGH, Massachusetts

PROJECT NUMBER: 138078	DATE: 3/25/2013
DESIGNED: DYOB	DRAWN: DYOB
CHECKED:	APPROVED:
SHEET NO.: 4 OF 4	

I:\COMMON\ENGINEERING\DYOB\DYOB\138078\BRIDGE\138078.DWG 3/25/2013 9:31 AM

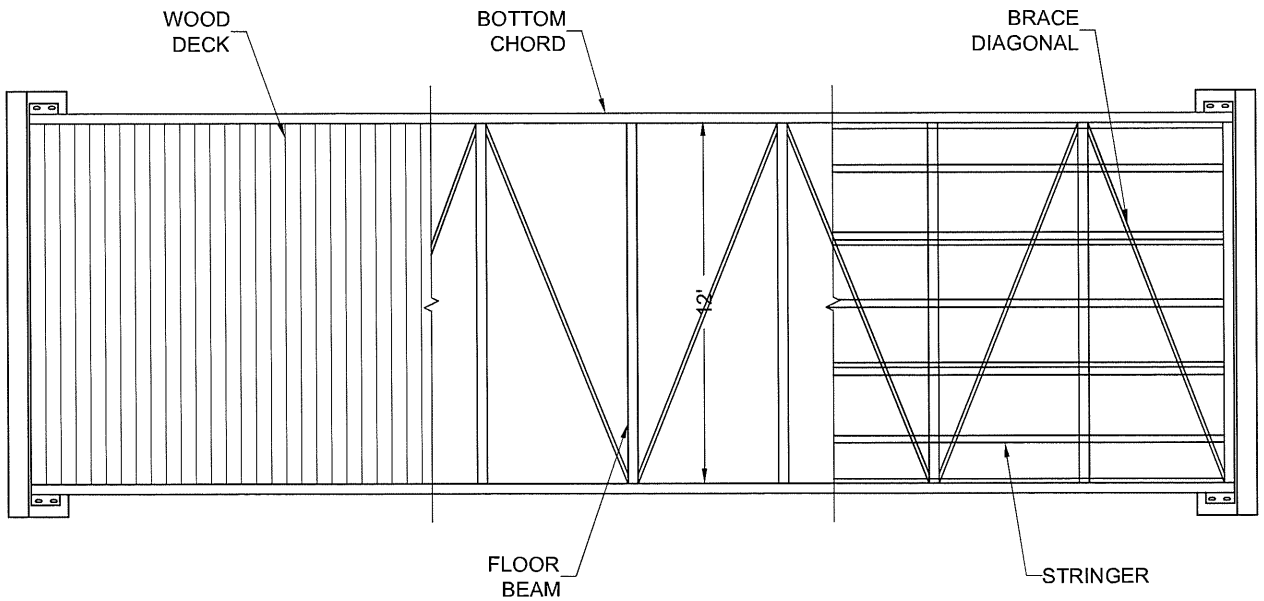

BRIDGE PLAN

The graphic information and details contained in these plans is schematic in nature. The plans, elevations and sections have been developed automatically in a way that demonstrates your current input in a relative and proportional manner. The details included in these plans have been selected to represent commonly built construction assemblies. These are not Engineering drawings, and as such, the details may vary in the final design for your project depending on many variables that are selected in your final scope of work and specifications.

PRELIMINARY
NOT FOR CONSTRUCTION

The design and information shown on this drawing is provided as a service to the project owner, engineer and contractor by Contech Engineered Solutions LLC ("Contech"). Neither this drawing, nor any part thereof, may be used, reproduced or modified in any manner without the prior written consent of Contech. Failure to comply is done at the user's own risk and Contech expressly disclaims any liability or responsibility for such use.

If discrepancies between the supplied information upon which the drawing is based and actual field conditions are encountered as site work progresses, these discrepancies must be reported to Contech immediately for re-evaluation of the design. Contech accepts no liability for designs based on missing, incomplete or inaccurate information supplied by others.

MARK	DATE	REVISION DESCRIPTION	BY

CONTECH®
ENGINEERED SOLUTIONS LLC
www.contechES.com
9025 Centre Pointe Dr., Suite 400, West Chester, OH 45069
800-338-1122 513-645-7000 513-645-7993 FAX

CONTINENTAL BRIDGE

CONTECH
DYOB®
DRAWING

Capstone® 40' Span x 12' Width
HIGH SCHOOL PEDESTRIAN BRIDGE 480610
Pedestrian Bridge
MIDDLEBOROUGH, Massachusetts

PROJECT NUMBER: 138078	DATE: 3/25/2013
DESIGNED: DYOB	DRAWN: DYOB
CHECKED:	APPROVED:
SHEET NO.: 2 OF 4	

I:\COMMON\ENGINEERING\DYOB\DYOB138078\BRIDGE138078.DWG 3/25/2013 9:30 AM

Art Barn Bridge

Blue Bell, Pennsylvania

Project Team Members:

Owner:
Montgomery County Community College

Engineer:
STV Engineers, Inc.

Contractor:
Donald E. Reisinger, Inc.

Technical Description:

• Width:	8 ft
• Span:	75 ft
• Style:	Connector®
• Finish:	Weathering Steel
• Decking:	Concrete
Installation Date:	March 2009

Due to Montgomery County's population more than doubling over the last 50 years, the demand for programs at Montgomery County Community College (MCCC) has increased as well. In order to meet the new demand, MCCC has expanded its campus. Phase One of this growth included the renovation and expansion of the art facility on the Central Campus. This art facility, known locally as the Art Barn, was named because an old barn and its silos were rehabilitated into a cultural arts center.

Access to the new facility was limited, so in order to provide access from the Central Campus to the newly expanded facility, a pedestrian structure was needed to cross a stream. A Continental® truss structure was chosen over other options because of its cost effectiveness, ease of installation and aesthetic appeal. The structure was installed in just one day and was designed to blend in with the surroundings.

"With the renovation of Parkhouse - our primary classroom building - nearly completed, the pedestrian structure will be put to full use," stated Andrew Gulotta, Project Manager with MCCC. "The student population, which has increased in size by nearly 20 percent in the last two years, will take full advantage of the bridge to access the Art Barn from Parkhouse. In addition, the bridge will act as a main entrance to the newly renovated classroom building."

This Fine Arts Center project won the 2009 Montgomery Award for excellence in planning and design in the category of Land Development. The project was specifically recognized for its "preservation and renovation efforts, effective site planning, complementary architecture and well-designed sculpture garden."

"We - faculty, staff and students - here at MCCC truly appreciate the pedestrian bridge," added Andrew Gulotta. "The competitive cost and aesthetic appeal made it a very successful option. It was a pleasure working with Contech, and we highly recommend this company. They were truly professional and they were on top of the project from design to installation."

© 2012 Contech Engineered Solutions LLC

Evans Creek Preserve Phase IA

Sammamish, Washington

Project Team Members:

Owner:
City of Sammamish

Engineer:
Gray and Osborne, Inc.

Contractor:
Tiger Construction and Excavation

Technical Description:

• Width:	6-ft.
• Span:	35-ft.
• Style:	Capstone®
• Finish:	Weathering Steel
• Decking:	Wood
Installation Date:	August 2011

The city of Sammamish has turned a 179-acre area of wetland on 224th Avenue Northeast into a community park, complete with a 2.6-mile trail system that snakes around and through wetlands and meadows.

"Evans Creek Preserve is a regional park, especially for residents of Sammamish, Redmond, Duvall, Issaquah and Fall City," said city parks project manager Kellye Hilde. "Our ultimate goal is to do an outdoor classroom. It's not just for hiking, but stewardship programs and learning about the ecosystems and waterways. It's an environmental-education destination."

The City of Sammamish needed a bridge structure to span Evans Creek and create a path for tourists to travel from the parking lot to the main section of the park. The City worked with Gray & Osborne, Inc., the structural engineer, to find a solution.

A Continental Pedestrian Truss Bridge from Contech was chosen because it's long, clear spans minimize intrusion into environmentally sensitive areas. It was also a more cost-effective solution when compared with the alternatives. Tiger Construction and Excavation installed the bridge in less than two hours.

"The prefabricated bridge exceeded the City's expectations," said Hilde. "The completed bridge was beautifully designed and fit the project perimeters perfectly."

The Grand Opening of Evans Creek Preserve was in October with more than 200 guests in attendance.

© 2012 Contech Engineered Solutions LLC

Appendix F

Alternative 2b – Supporting Documents

Replace the Bridge with a New Paved Roadway on Bermed Earth Fill with MSE Retaining Walls

Steere ENGINEERING INC
Bridge and Structural Engineers

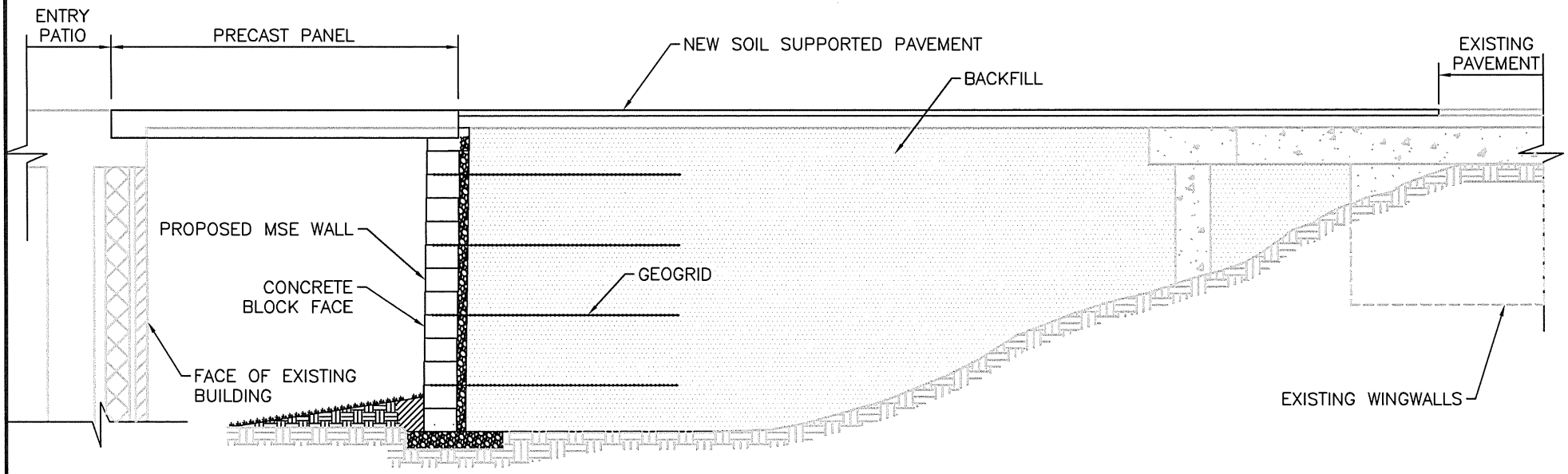

SHEET 1

Steere ENGINEERING INC
Bridge and Structural Engineers

2374 POST ROAD
SUITE 201
WARWICK, RI
02886

MIDDLEBOROUGH HIGH SCHOOL
PEDESTRIAN BRIDGE
FEASIBILITY STUDY

Scale: NTS
Drawn by: AJS
Check By: SPB
Date: APRIL 2013
Rev No: 0

CONCEPTUAL SECTION

BRIDGE REPLACEMENT
ALTERNATIVE 2B

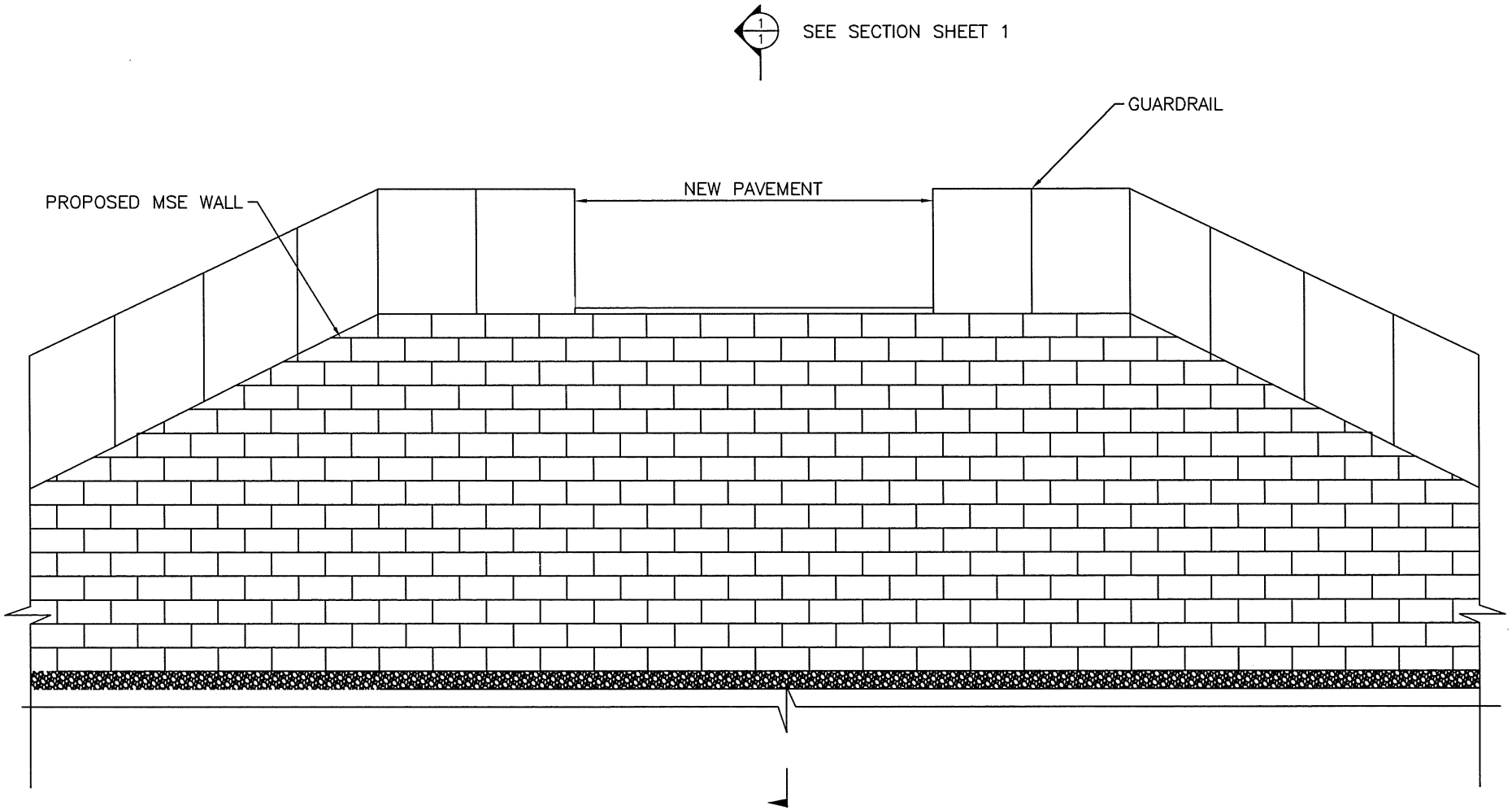

ELEVATION: FACE OF MSE WALL

SHEET 2

Steere ENGINEERING INC
Bridge and Structural Engineers

2374 POST ROAD
SUITE 201
WARWICK, RI
02886

MIDDLEBOROUGH HIGH SCHOOL
PEDESTRIAN BRIDGE
FEASIBILITY STUDY

Scale: NTS
Drawn by: AJS
Check By: SPB
Date: APRIL 2013
Rev No: 0

CONCEPTUAL ELEVATION

BRIDGE REPLACEMENT
ALTERNATIVE 2B

Typical Elevation of MSE Wall